RADIATOR UPPER SUPPORT (ASSY)



F14459-A

REMOVAL

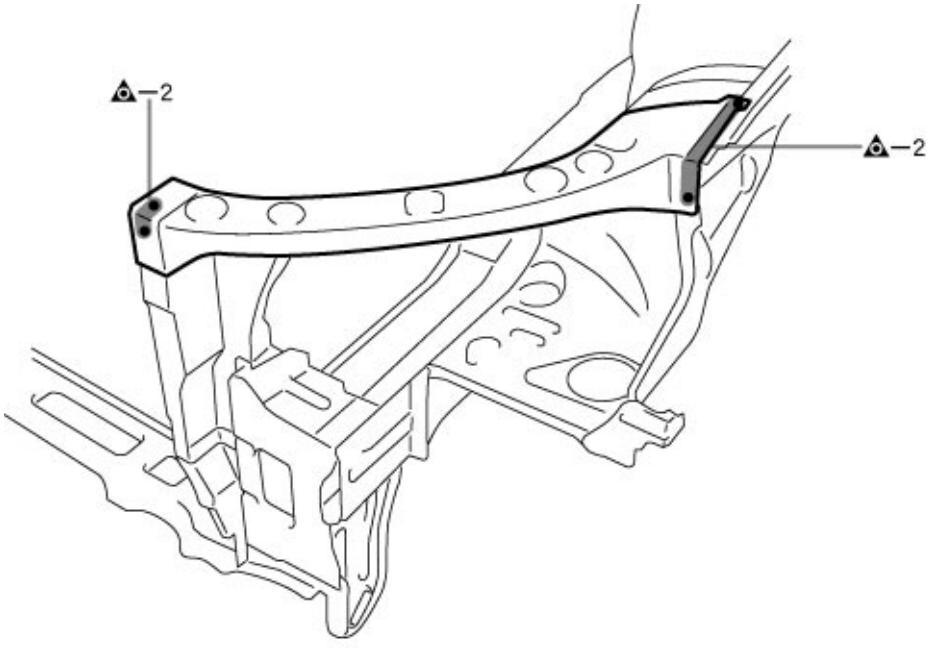

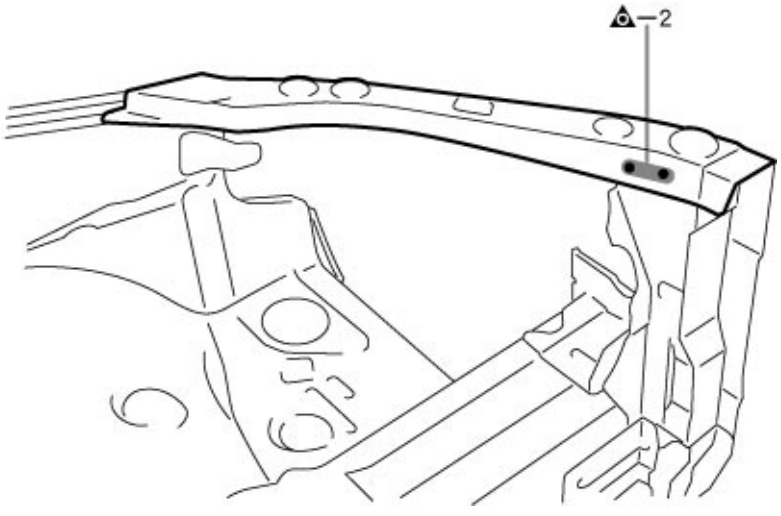

F14459

INSTALLATION

- Temporarily install the new parts and measure each part of the new parts in accordance with the body dimension diagram. (See the body dimension diagram)
- Inspect the fitting of the related parts around the new parts before welding. This affects the appearance of the finish.
- After welding, apply the polyurethane foam to the corresponding parts.
- After welding, apply body sealer and under-coating to the corresponding parts.
- After applying the top coat layer, apply anti-rust agent to the inside of the necked section structural weld spots.

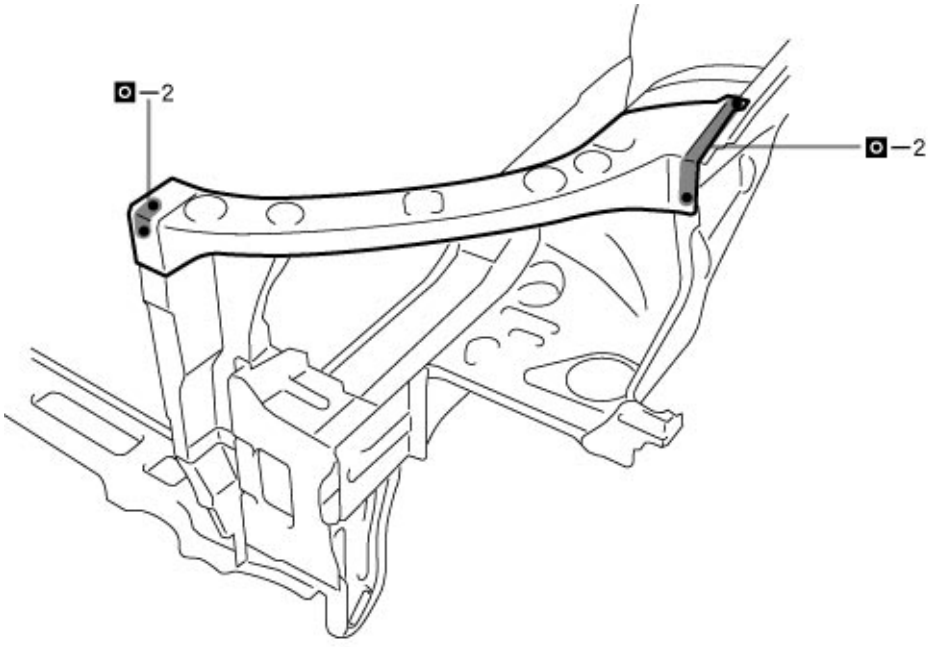

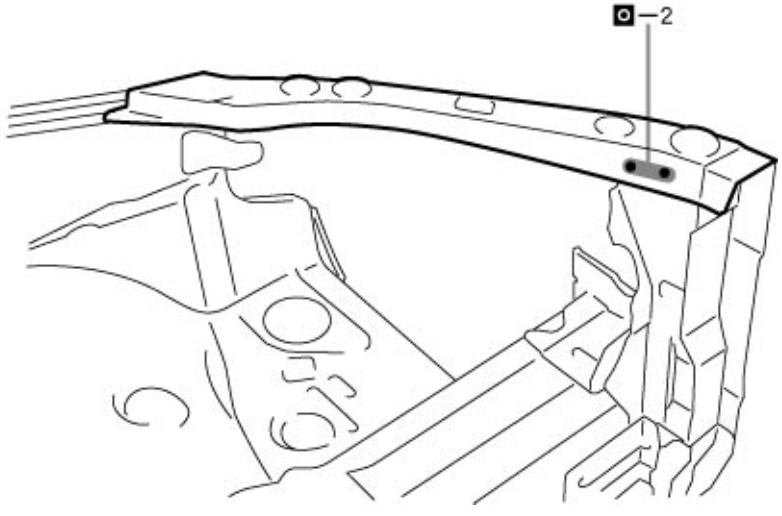

F14460

RADIATOR SIDE SUPPORT (ASSY)

REMOVAL
With the radiator upper support removed.



F14461-A

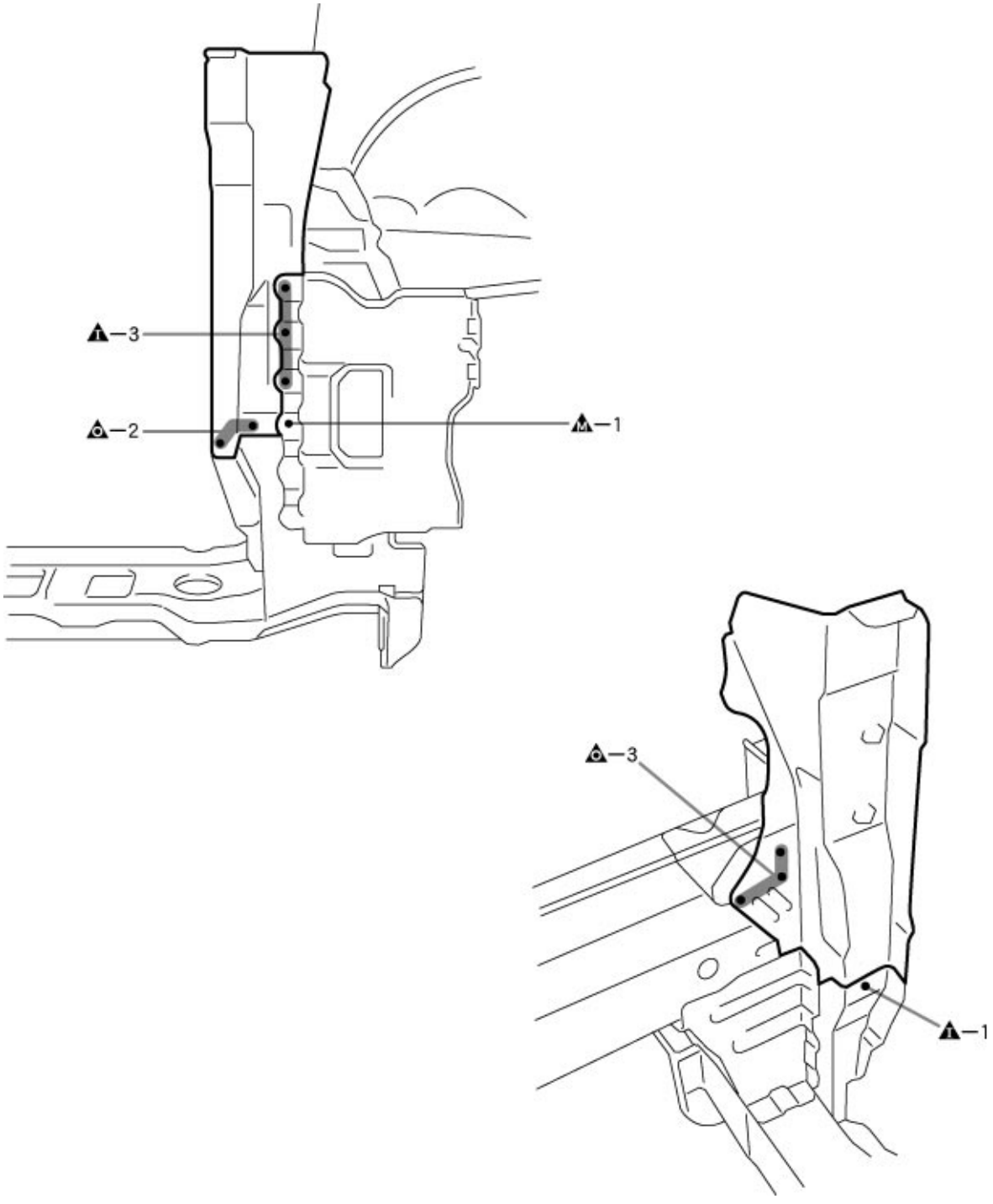

F14461

INSTALLATION

- Temporarily install the new parts and measure each part of the new parts in accordance with the body dimension diagram. (See the body dimension diagram)
- Inspect the fitting of the related parts around the new parts before welding. This affects the appearance of the finish.
- After welding, apply the polyurethane foam to the corresponding parts.
- After welding, apply body sealer and under-coating to the corresponding parts.
- After applying the top coat layer, apply anti-rust agent to the inside of the necked section structural weld spots.

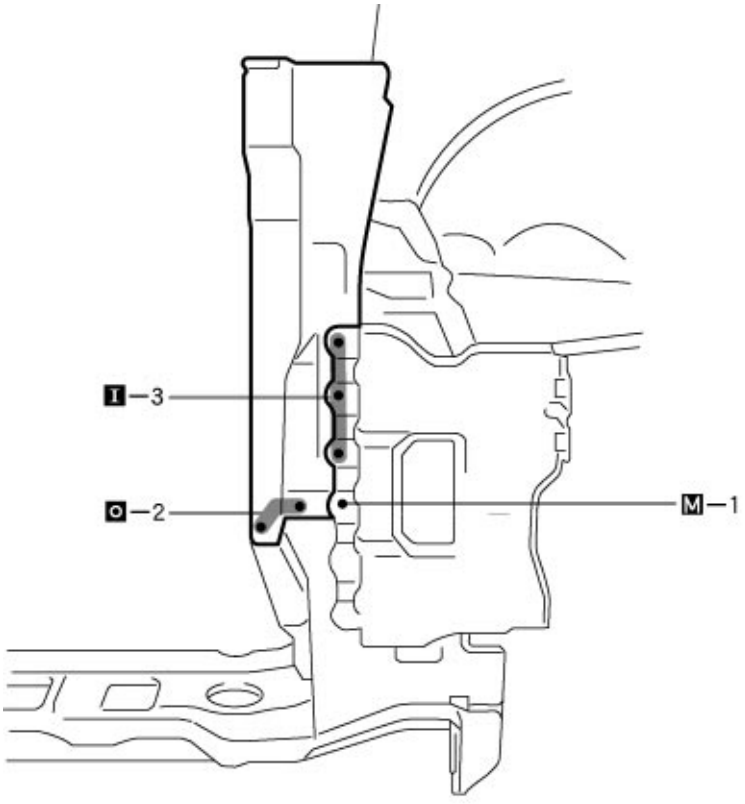

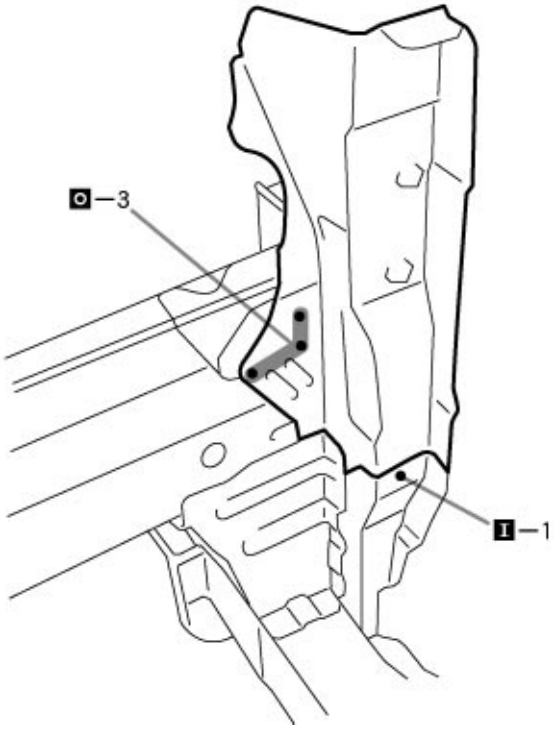

F14462

FRONT CROSSMEMBER (ASSY)

REMOVAL



F14463-A

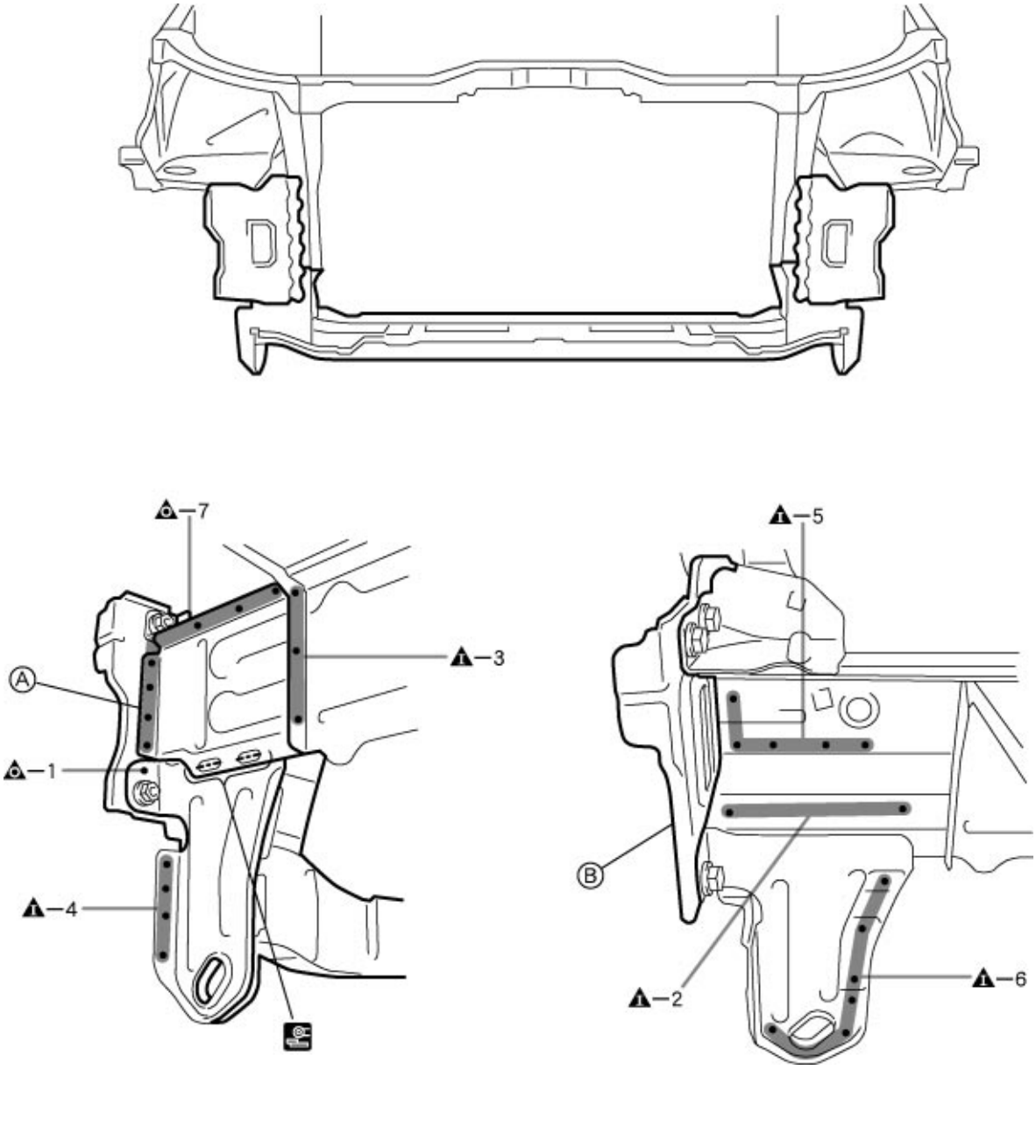

F14463

POINT

1 After removing the Ⓐ, remove the front crossmember.
2 Remove the Ⓑ at the same time.

PART NAME

Ⓐ Front Side Member Extension Ⓑ Front Side Member Rear Plate

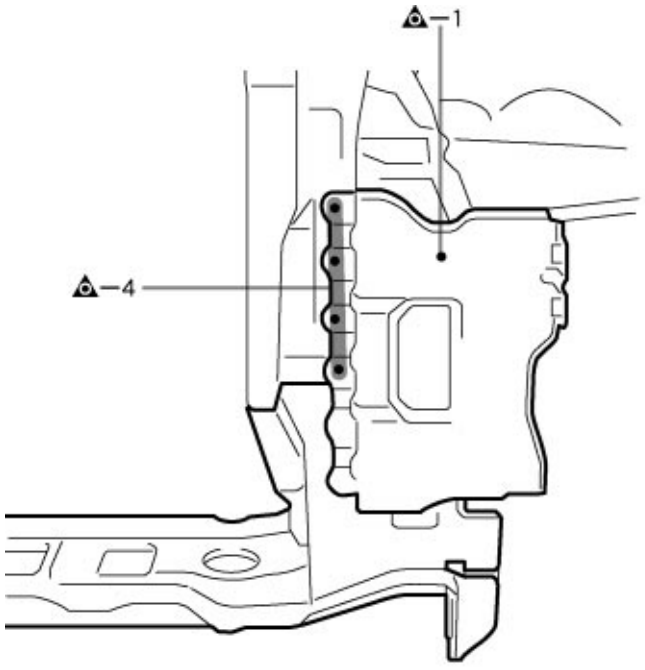

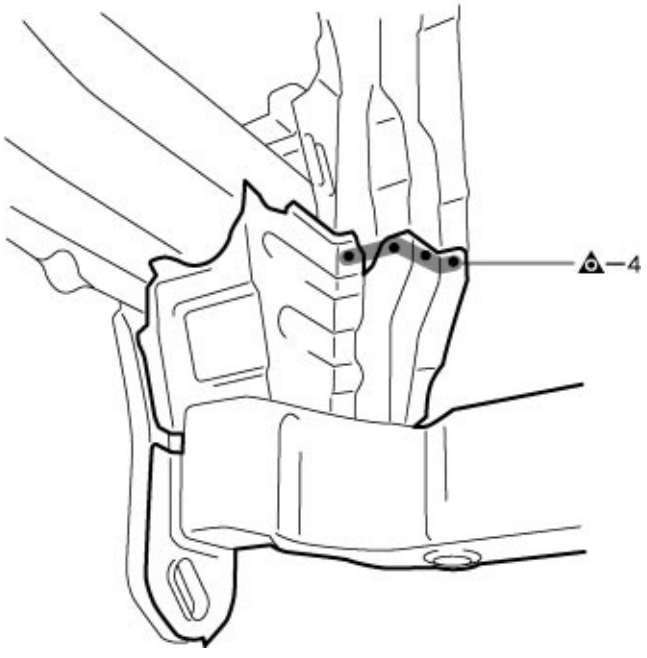

F14464

INSTALLATION

- Temporarily install the new parts and measure each part of the new parts in accordance with the body dimension diagram. (See the body dimension diagram)
- Inspect the fitting of the related parts around the new parts before welding. This affects the appearance of the finish.
- After welding, apply the polyurethane foam to the corresponding parts.
- After welding, apply body sealer and under-coating to the corresponding parts.
- After applying the top coat layer, apply anti-rust agent to the inside of the necked section structural weld spots.

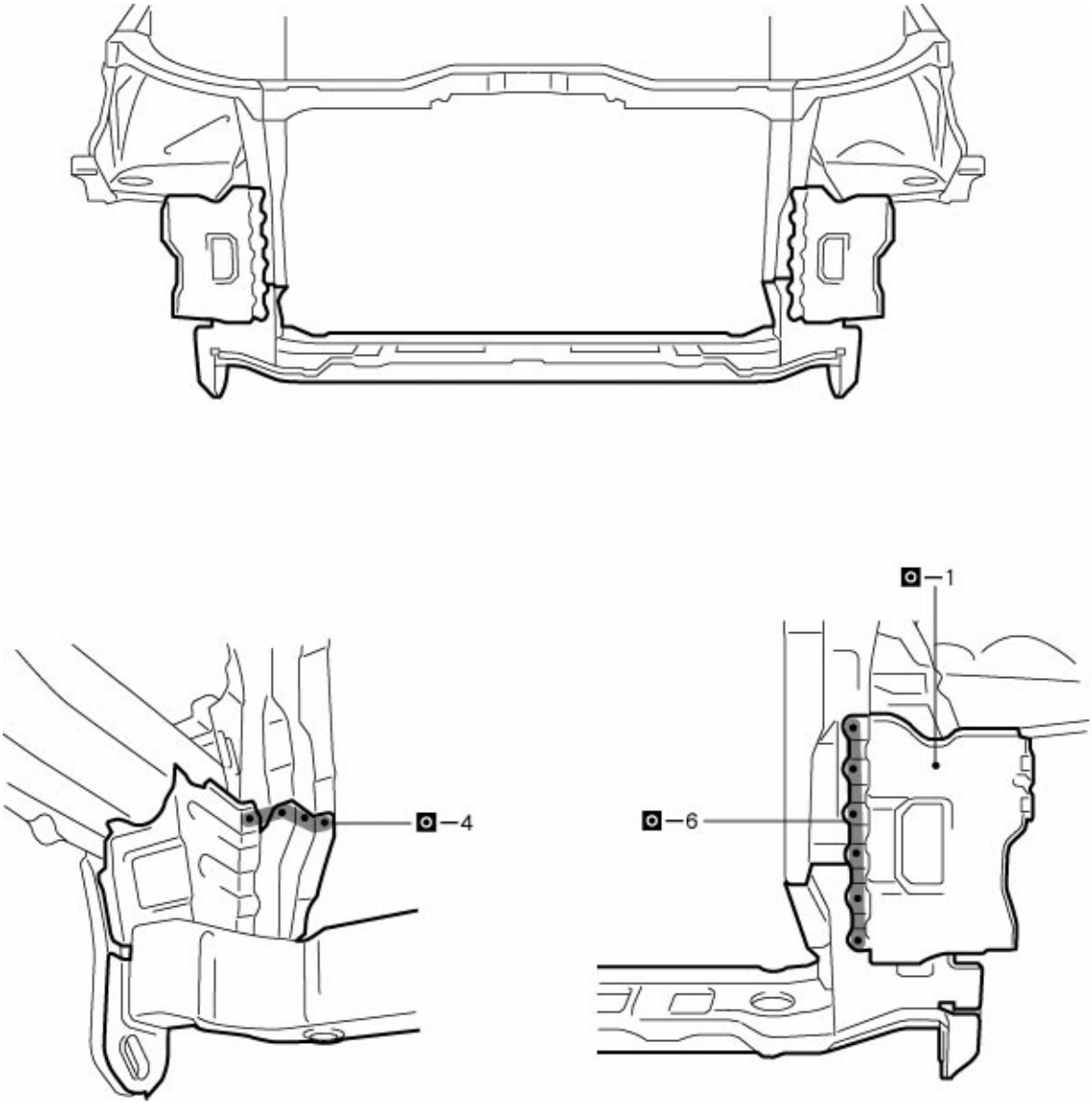

F14465

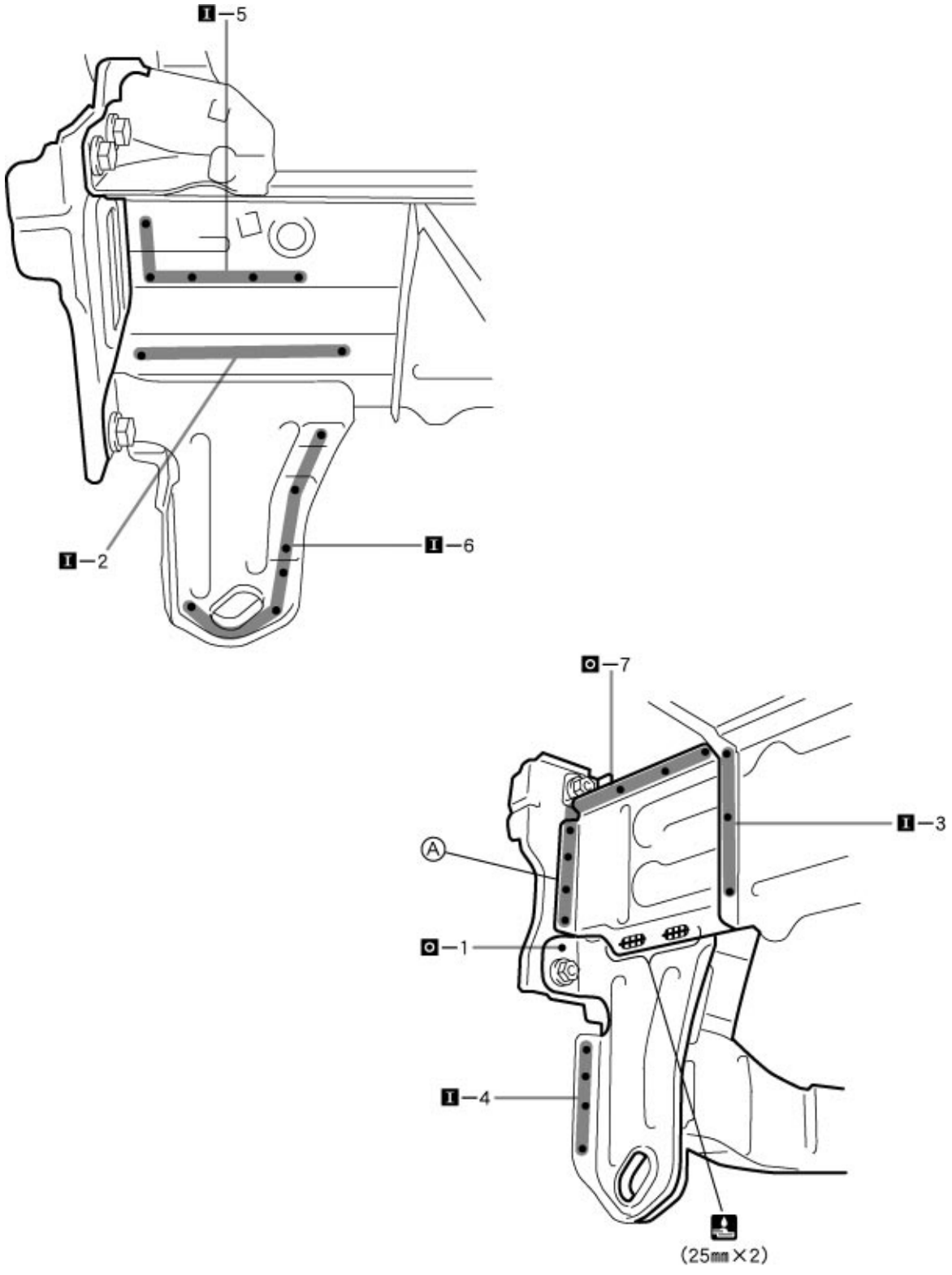

F14466

POINT

1 After installing the new parts, install the Ⓐ.

PART NAME

Ⓐ Front Side Member Extension
25mm (0.98in.)

RADIATOR SUPPORT (ASSY)

REMOVAL



F14467-A

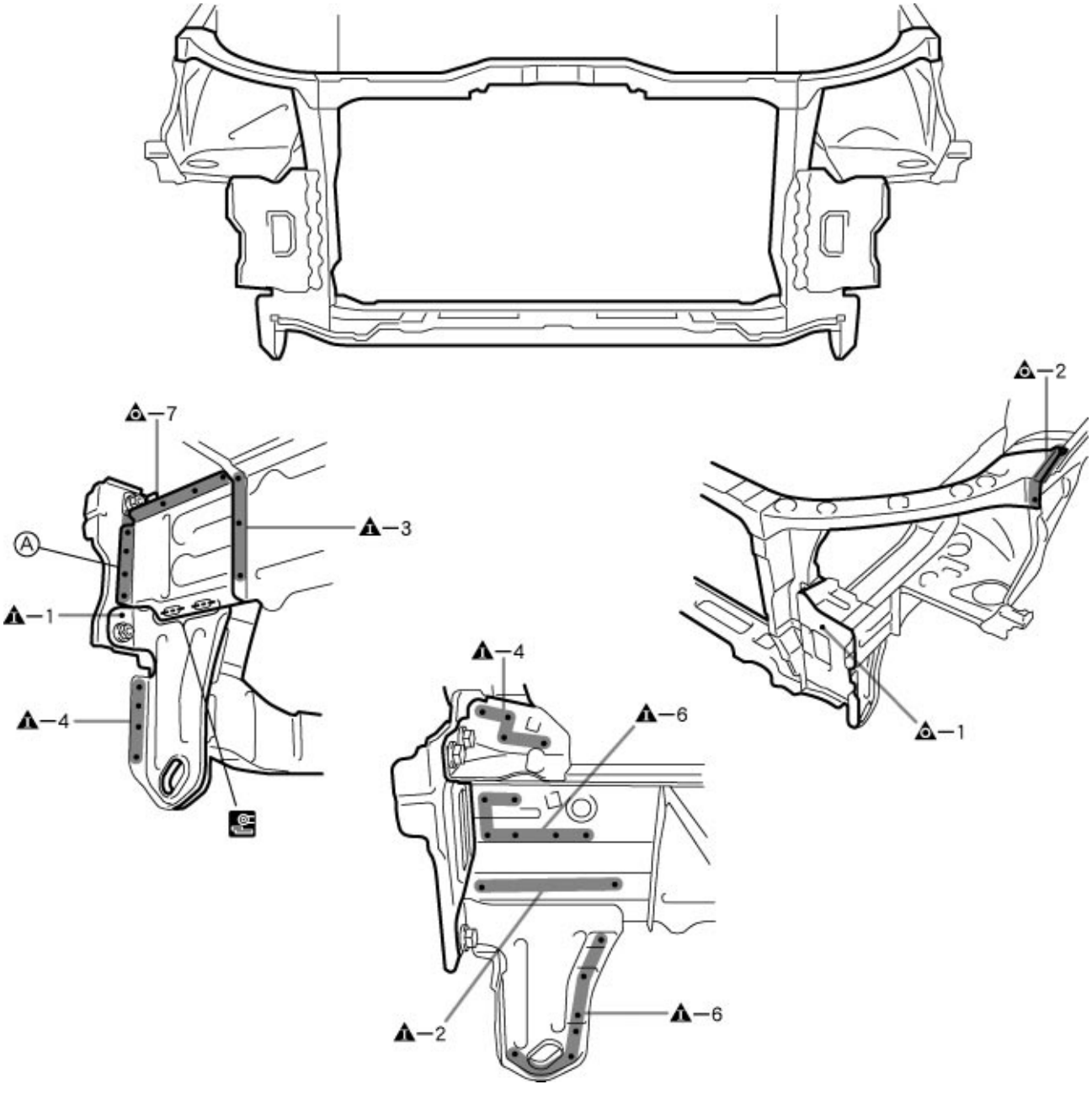

F14467

POINT

1 After removing the Ⓐ, remove the radiator support.

PART NAME

Ⓐ Front Side Member Extension

INSTALLATION

- Temporarily install the new parts and measure each part of the new parts in accordance with the body dimension diagram. (See the body dimension diagram)
- Inspect the fitting of the related parts around the new parts before welding. This affects the appearance of the finish.
- After welding, apply the polyurethane foam to the corresponding parts.
- After welding, apply body sealer and under-coating to the corresponding parts.
- After applying the top coat layer, apply anti-rust agent to the inside of the necked section structural weld spots.

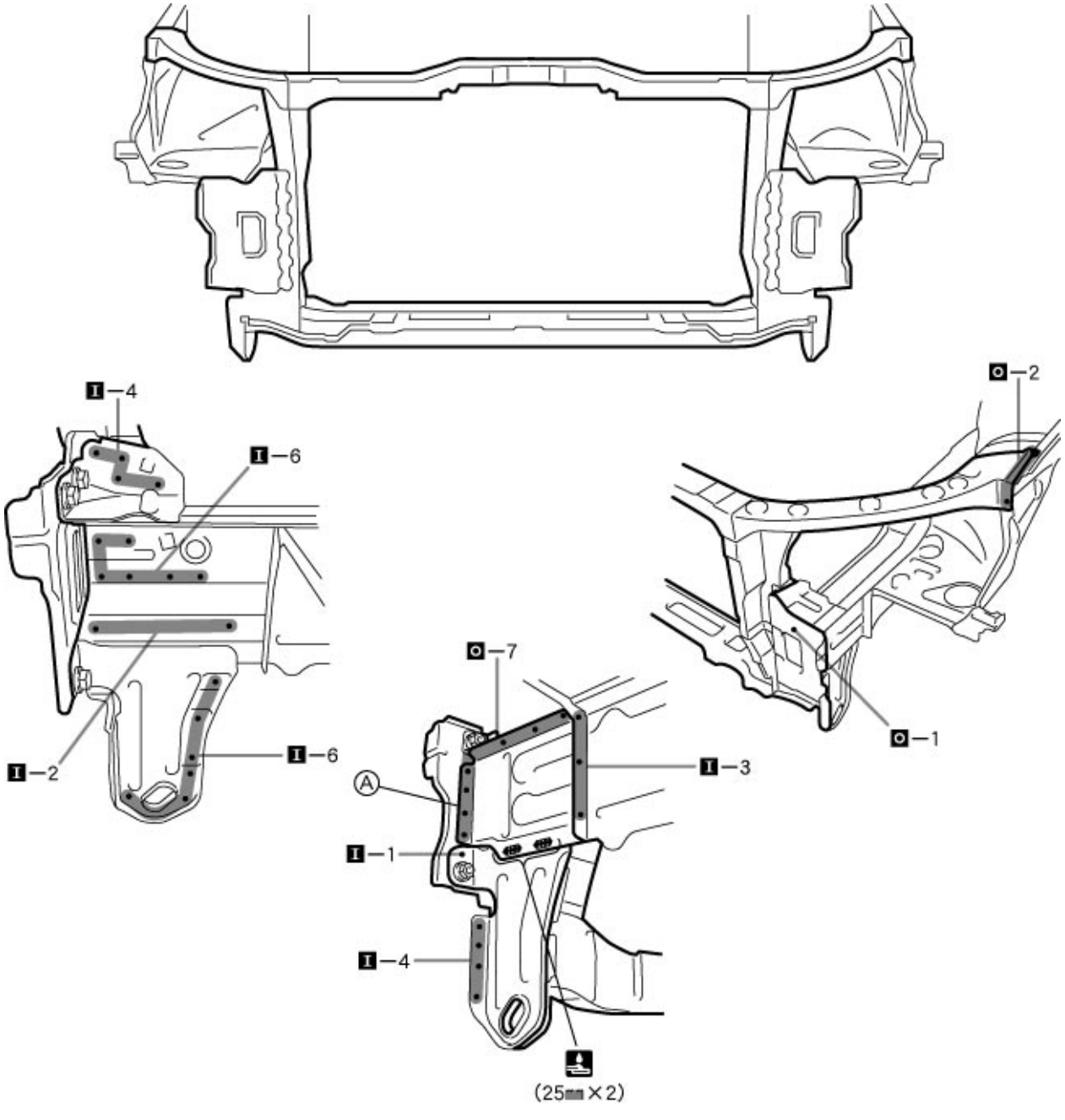

F14468

POINT

1 After installing the new parts, install the Ⓐ.

PART NAME

Ⓐ Front Side Member Extension
25mm (0.98in.)

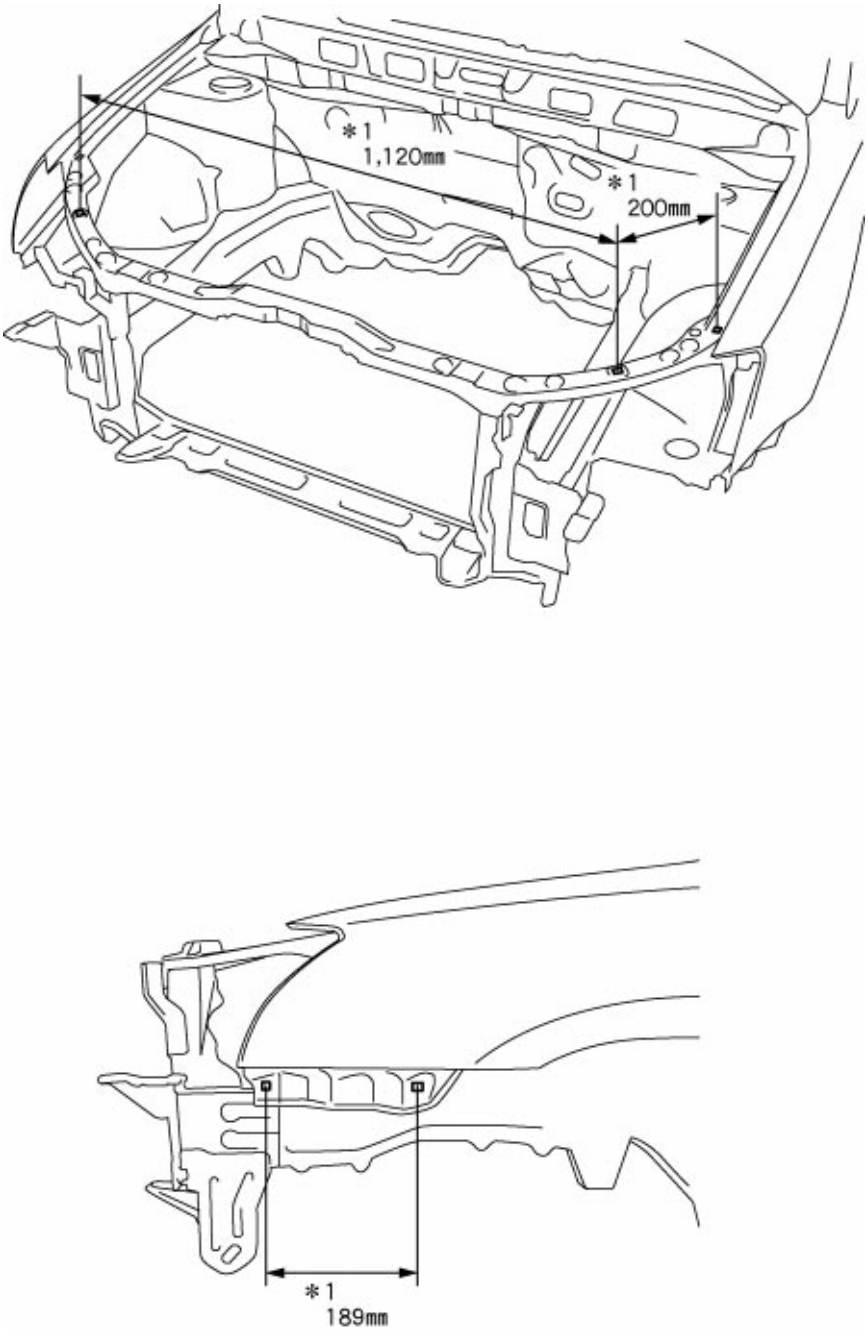

F14469

POINT

1 *1: The value is reference value.

189mm (7.44in.) 200mm (7.87in.) 1,120mm (44.09in.)

FRONT FENDER FRONT APRON (ASSY)



F14470-A

REMOVAL
With the radiator upper support removed.

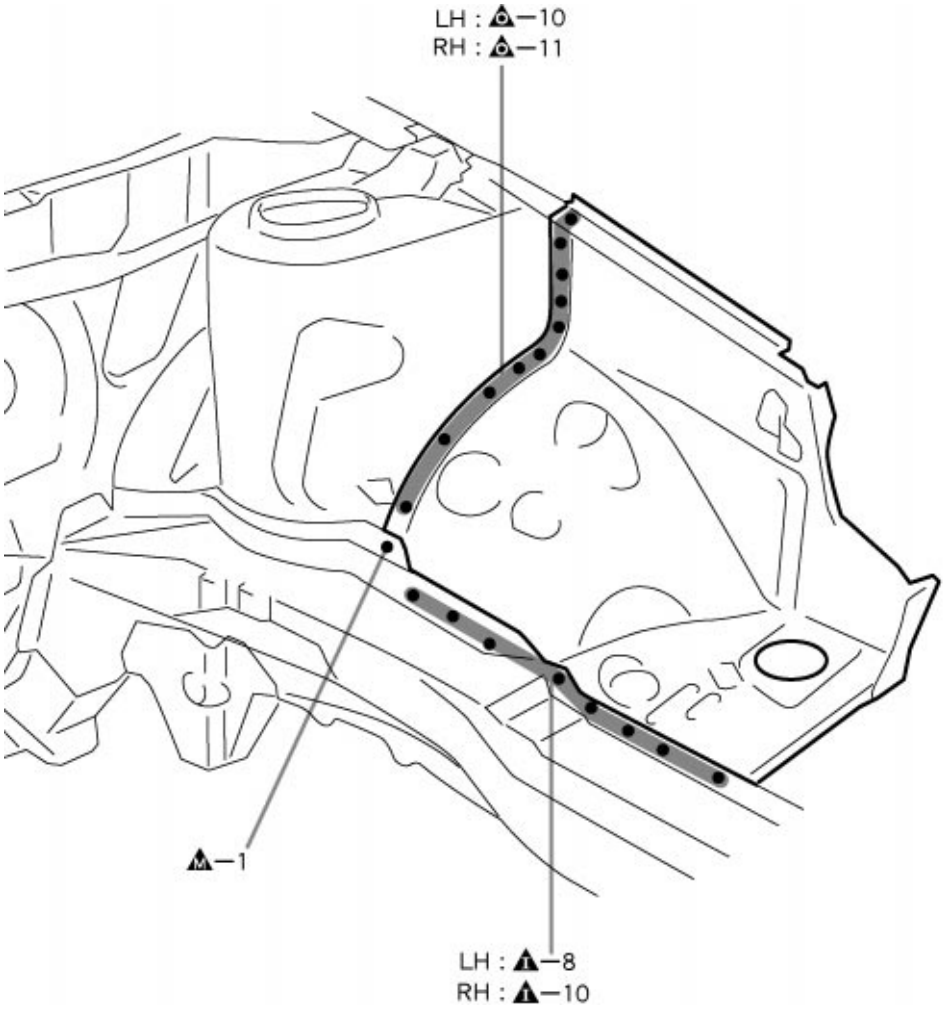

F14470

INSTALLATION

- Temporarily install the new parts and measure each part of the new parts in accordance with the body dimension diagram. (See the body dimension diagram)
- Inspect the fitting of the related parts around the new parts before welding. This affects the appearance of the finish.
- After welding, apply the polyurethane foam to the corresponding parts.
- After welding, apply body sealer and under-coating to the corresponding parts.
- After applying the top coat layer, apply anti-rust agent to the inside of the necked section structural weld spots.

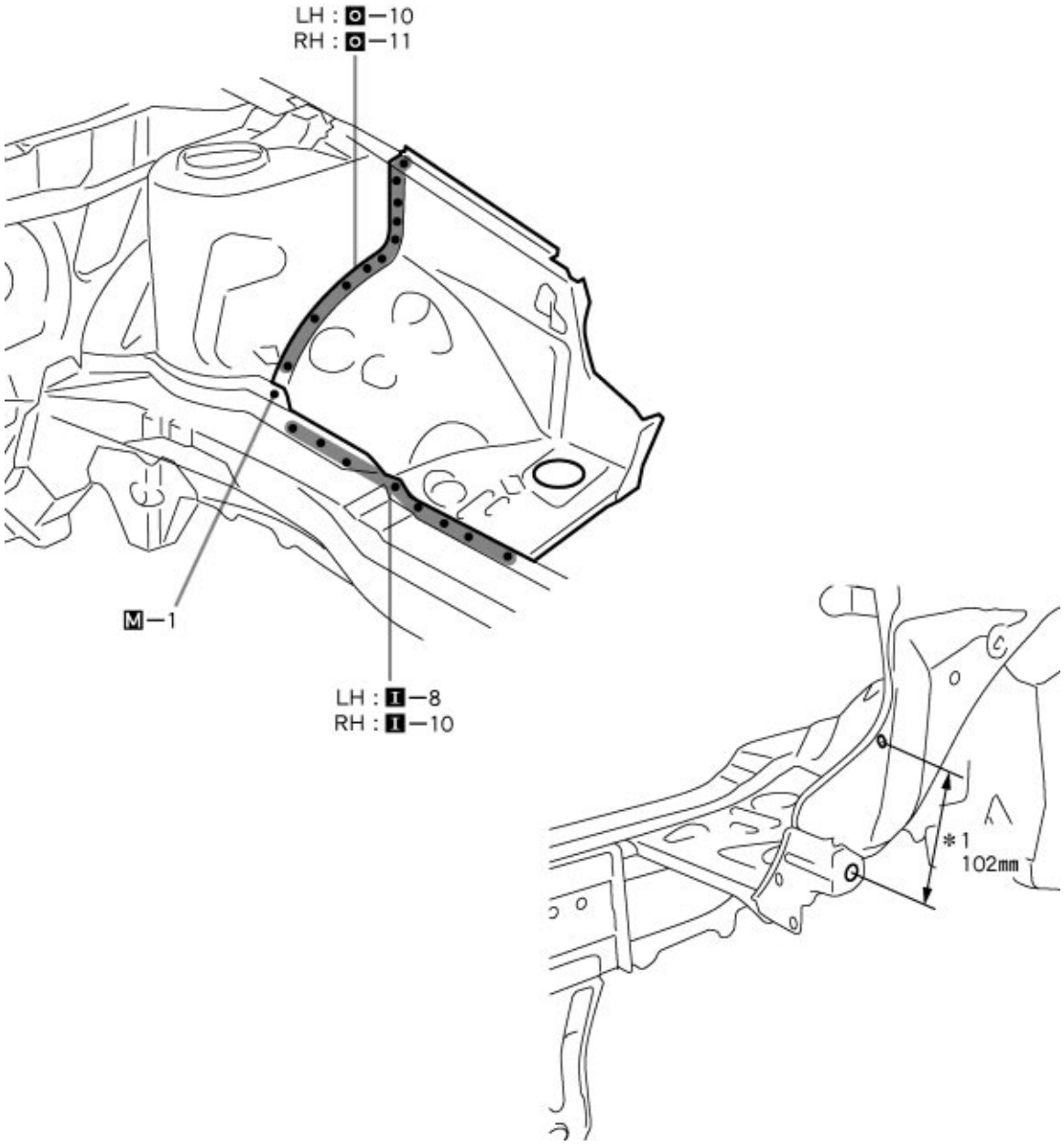

POINT

1 *1: The value is reference value.

102mm (4.02in.)

COWL TOP SIDE PANEL (ASSY)

REMOVAL



F14472-A

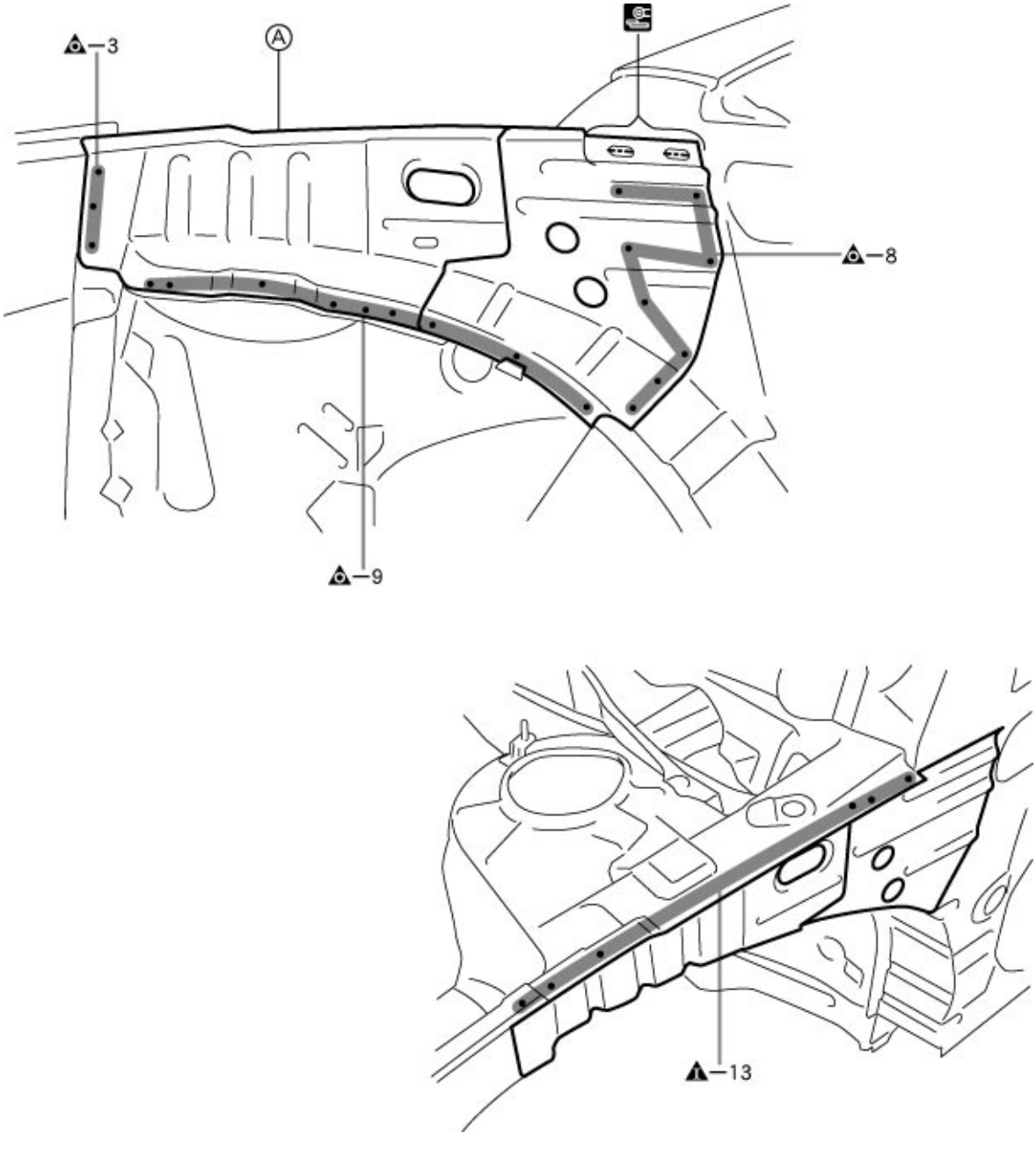

F14472

POINT

1 Remove the Ⓐ at the same time.

PART NAME

Ⓐ Cowl Top To Apron Brace

INSTALLATION

- Temporarily install the new parts and measure each part of the new parts in accordance with the body dimension diagram. (See the body dimension diagram)
- Inspect the fitting of the related parts around the new parts before welding. This affects the appearance of the finish.
- After welding, apply the polyurethane foam to the corresponding parts.
- After welding, apply body sealer and under-coating to the corresponding parts.
- After applying the top coat layer, apply anti-rust agent to the inside of the necked section structural weld spots.

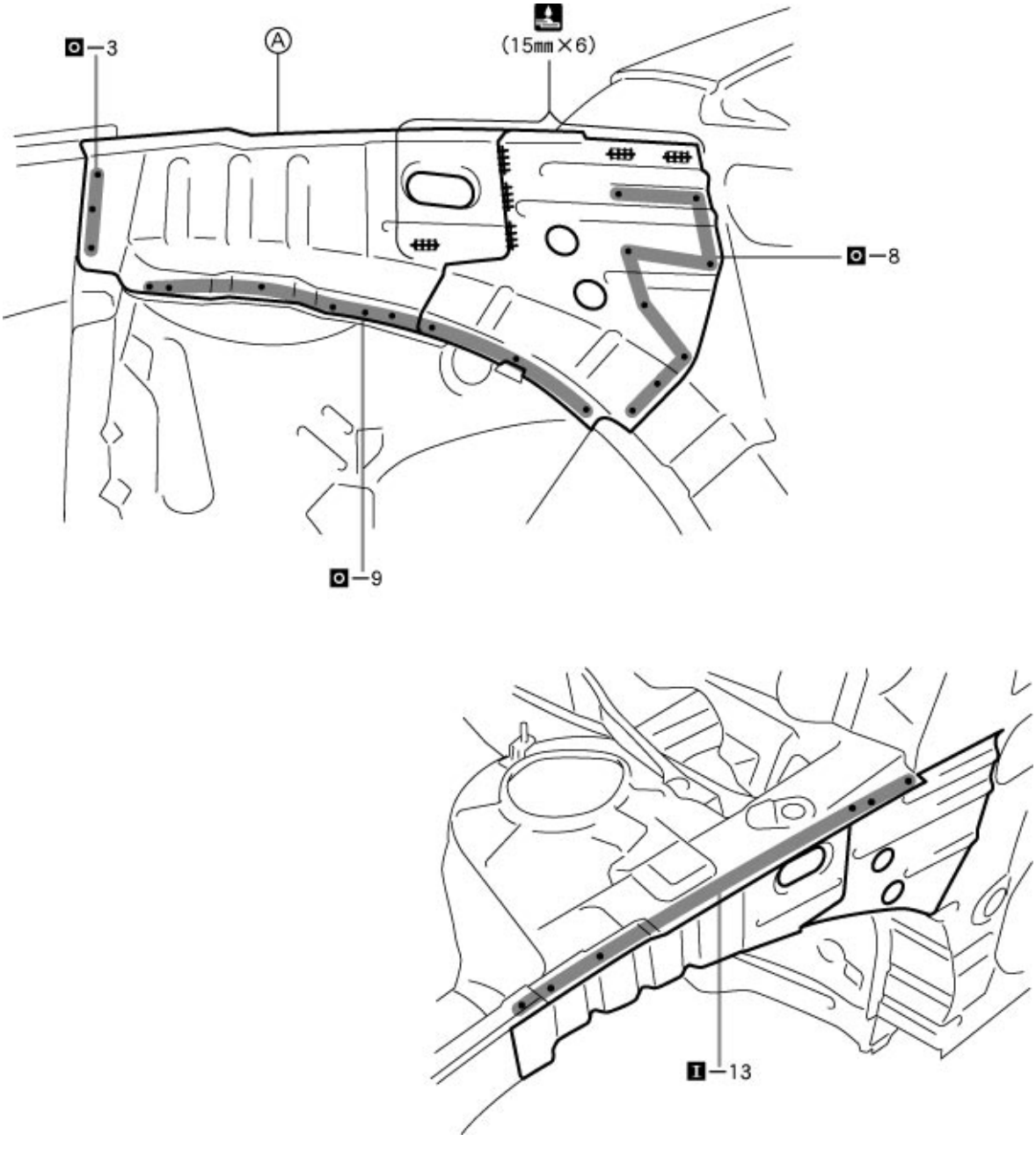

F14473

PART NAME

Ⓐ Cowl Top To Apron Brace

15mm (0.59in.)

FRONT FENDER APRON (ASSY)

REMOVAL
With the radiator upper support, cowl top side panel removed.



F14474-A

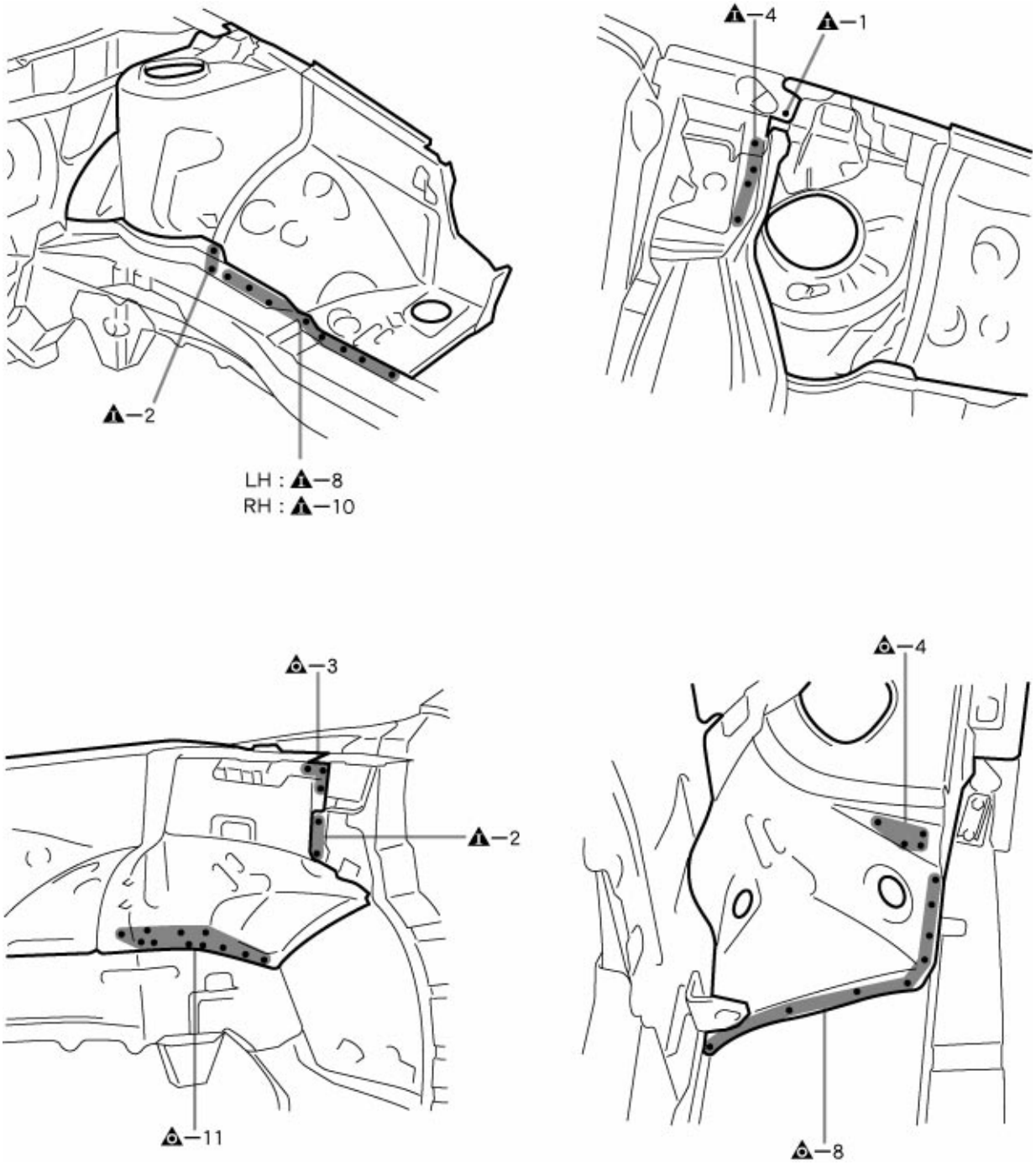

F14474

INSTALLATION

- Temporarily install the new parts and measure each part of the new parts in accordance with the body dimension diagram. (See the body dimension diagram)
- Inspect the fitting of the related parts around the new parts before welding. This affects the appearance of the finish.
- After welding, apply the polyurethane foam to the corresponding parts.
- After welding, apply body sealer and under-coating to the corresponding parts.
- After applying the top coat layer, apply anti-rust agent to the inside of the necked section structural weld spots.

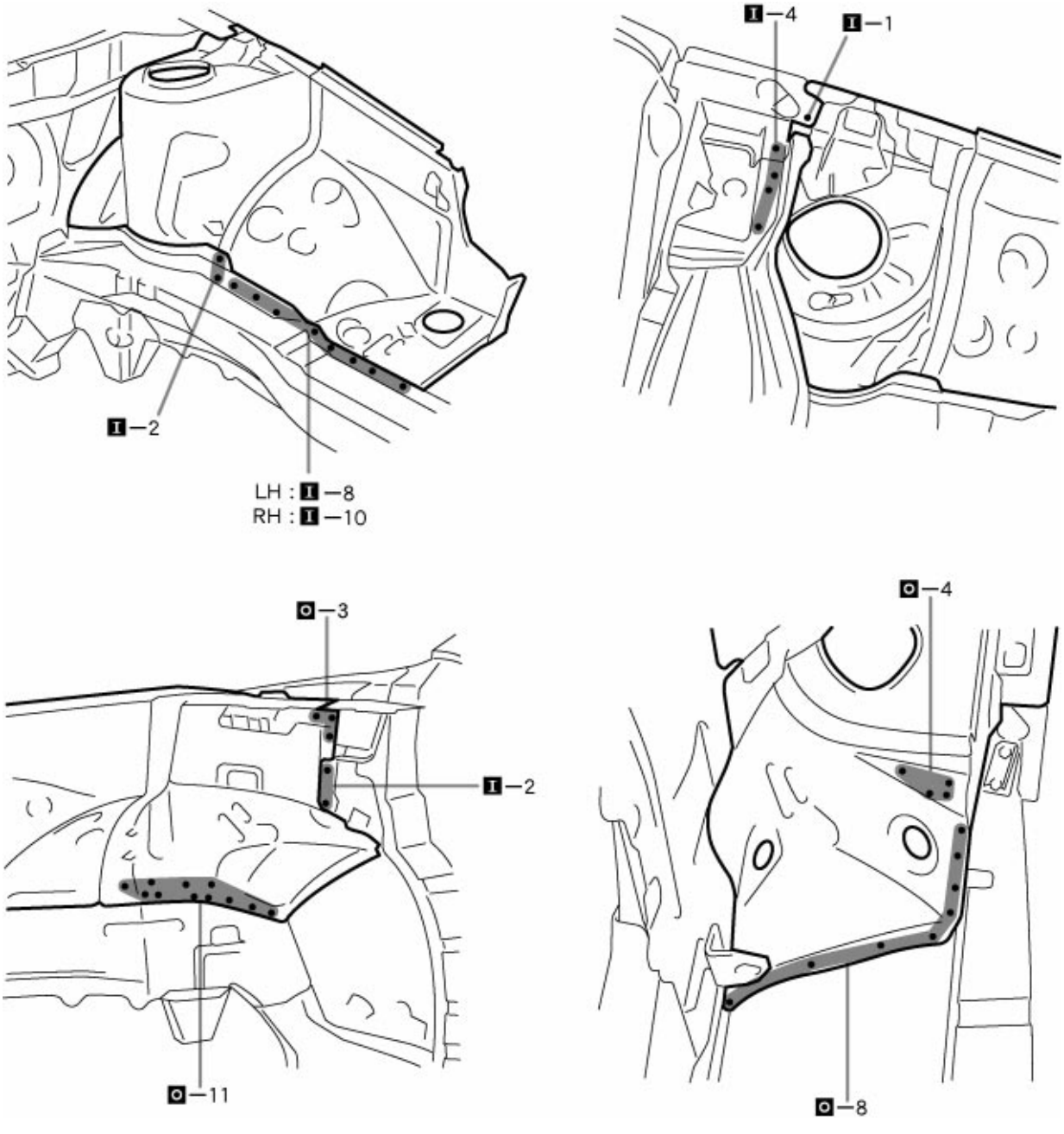

POINT

1 Make sure each measurement is correct, as this parts affects the front wheel alignment.

FRONT SIDE MEMBER (CUT-P)



F14476-A

REMOVAL
With the radiator side support, front crossmember removed.

〔LH〕

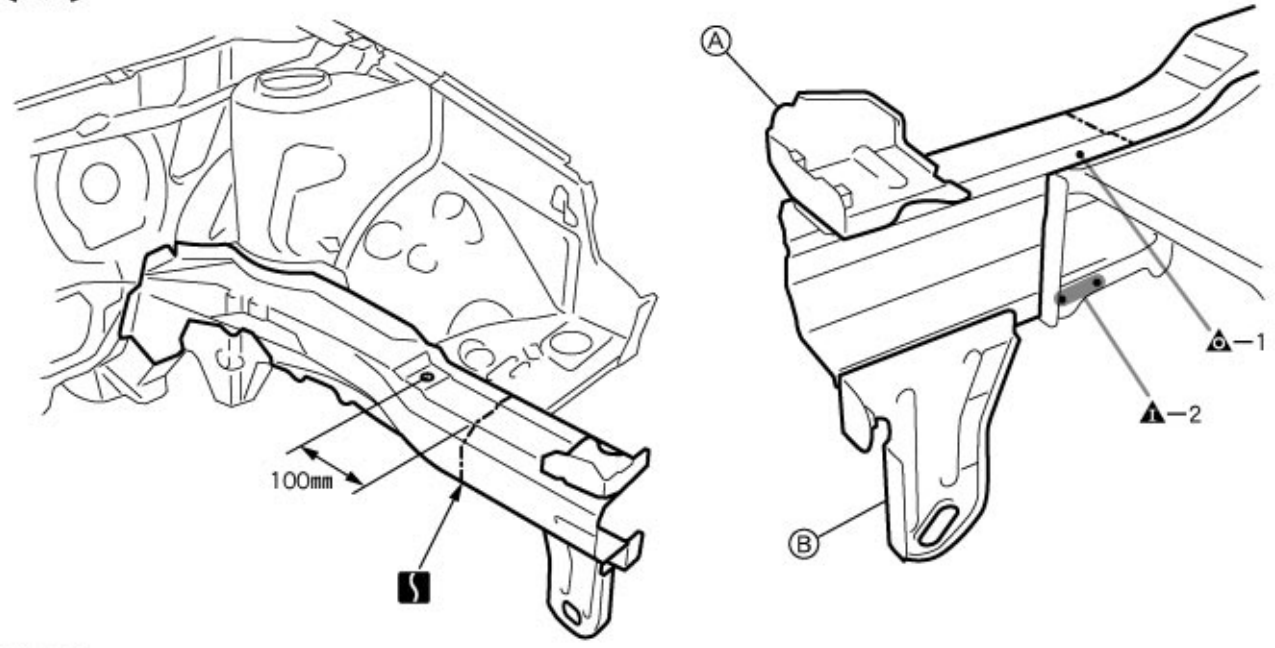

〔RH〕

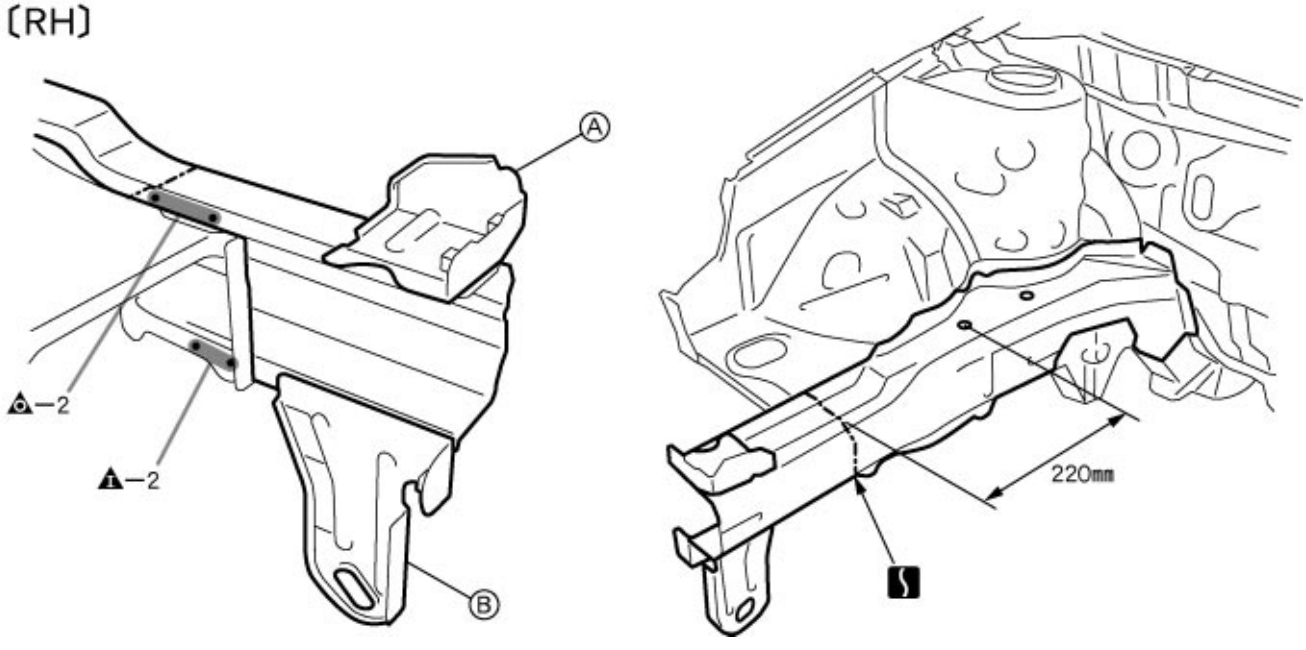

F14476

PART NAME
Ⓐ Front Side Member Support Ⓑ Front Side Member Front Plate

100mm (3.94in.) 220mm (8.66in.)

INSTALLATION

- Temporarily install the new parts and measure each part of the new parts in accordance with the body dimension diagram. (See the body dimension diagram)
- Inspect the fitting of the related parts around the new parts before welding. This affects the appearance of the finish.
- After welding, apply the polyurethane foam to the corresponding parts.
- After welding, apply body sealer and under-coating to the corresponding parts.
- After applying the top coat layer, apply anti-rust agent to the inside of the necked section structural weld spots.

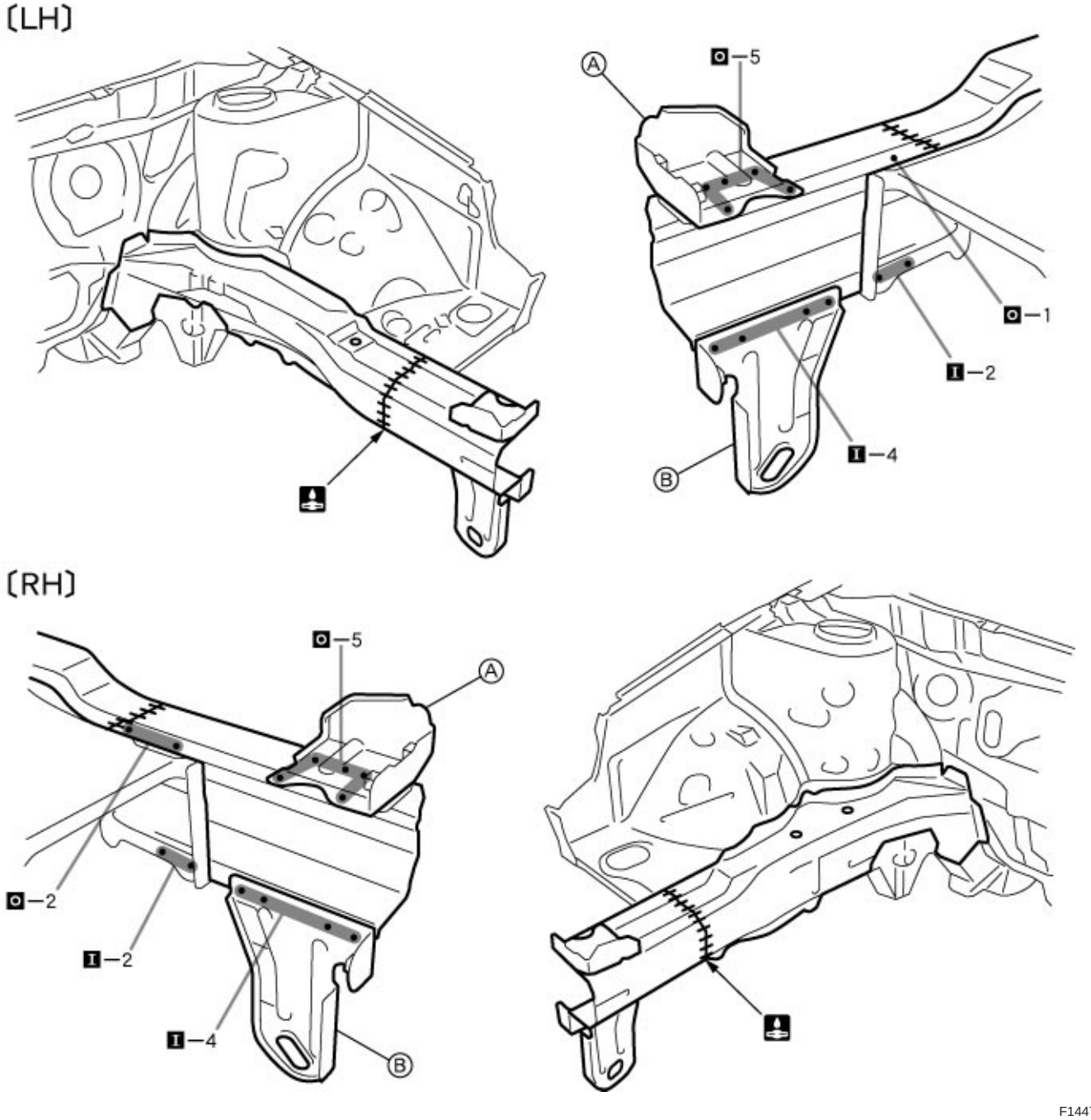

PART NAME

Ⓐ Front Side Member Support Ⓑ Front Side Member Front Plate

FRONT SIDE MEMBER (CUT-H)



F14478-A

REMOVAL
With the front crossmember, front fender apron removed.

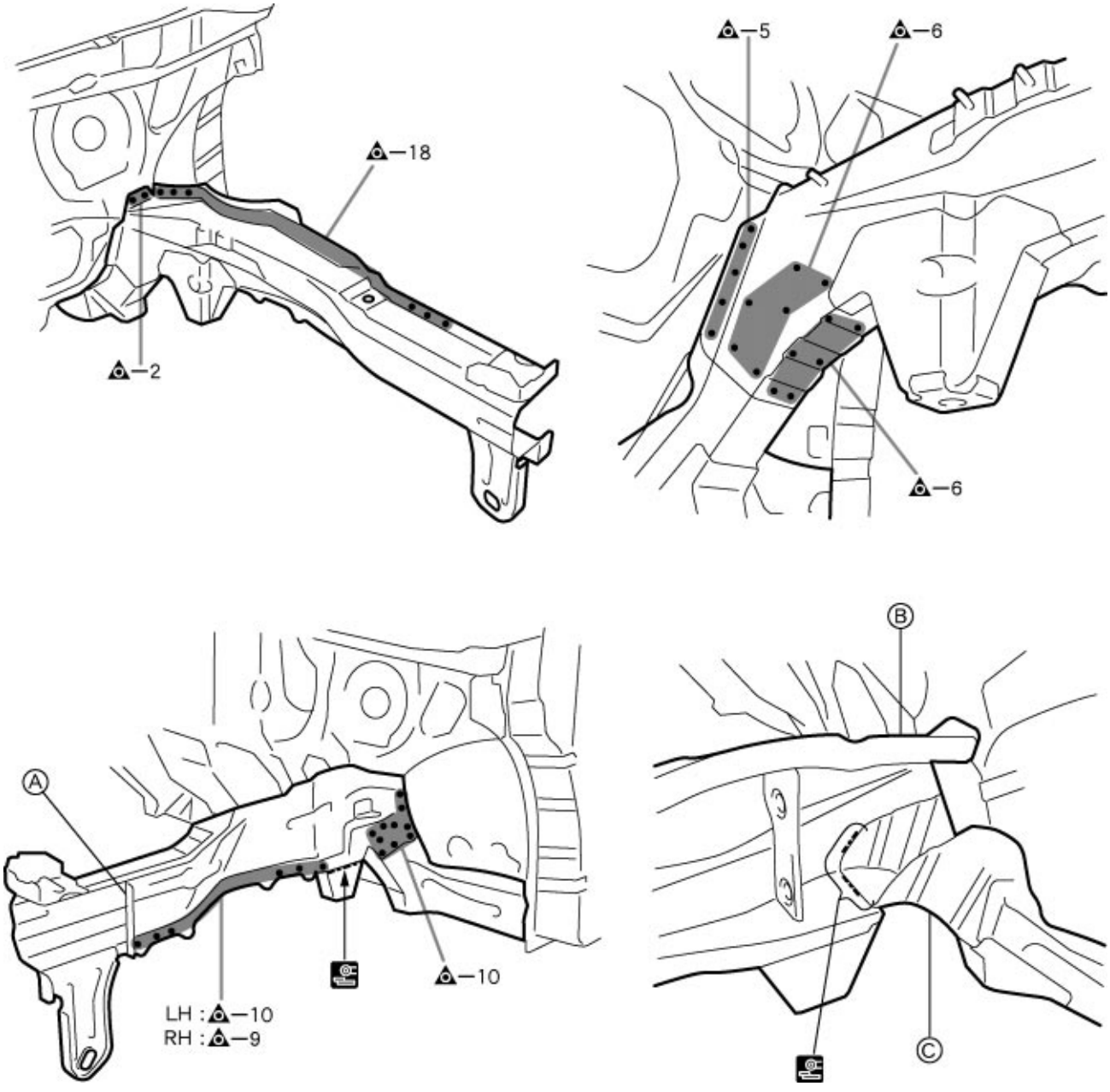

F14478

POINT
1 Separate Ⓑ and Ⓒ at the welded part, and then remove the front side member.

PART NAME
Ⓐ Front Side Member Outer Plate Ⓑ Front Side Inner Member
Ⓒ Front Side Inner Rear Member

INSTALLATION

- Temporarily install the new parts and measure each part of the new parts in accordance with the body dimension diagram. (See the body dimension diagram)
- Inspect the fitting of the related parts around the new parts before welding. This affects the appearance of the finish.
- After welding, apply the polyurethane foam to the corresponding parts.
- After welding, apply body sealer and under-coating to the corresponding parts.
- After applying the top coat layer, apply anti-rust agent to the inside of the necked section structural weld spots.

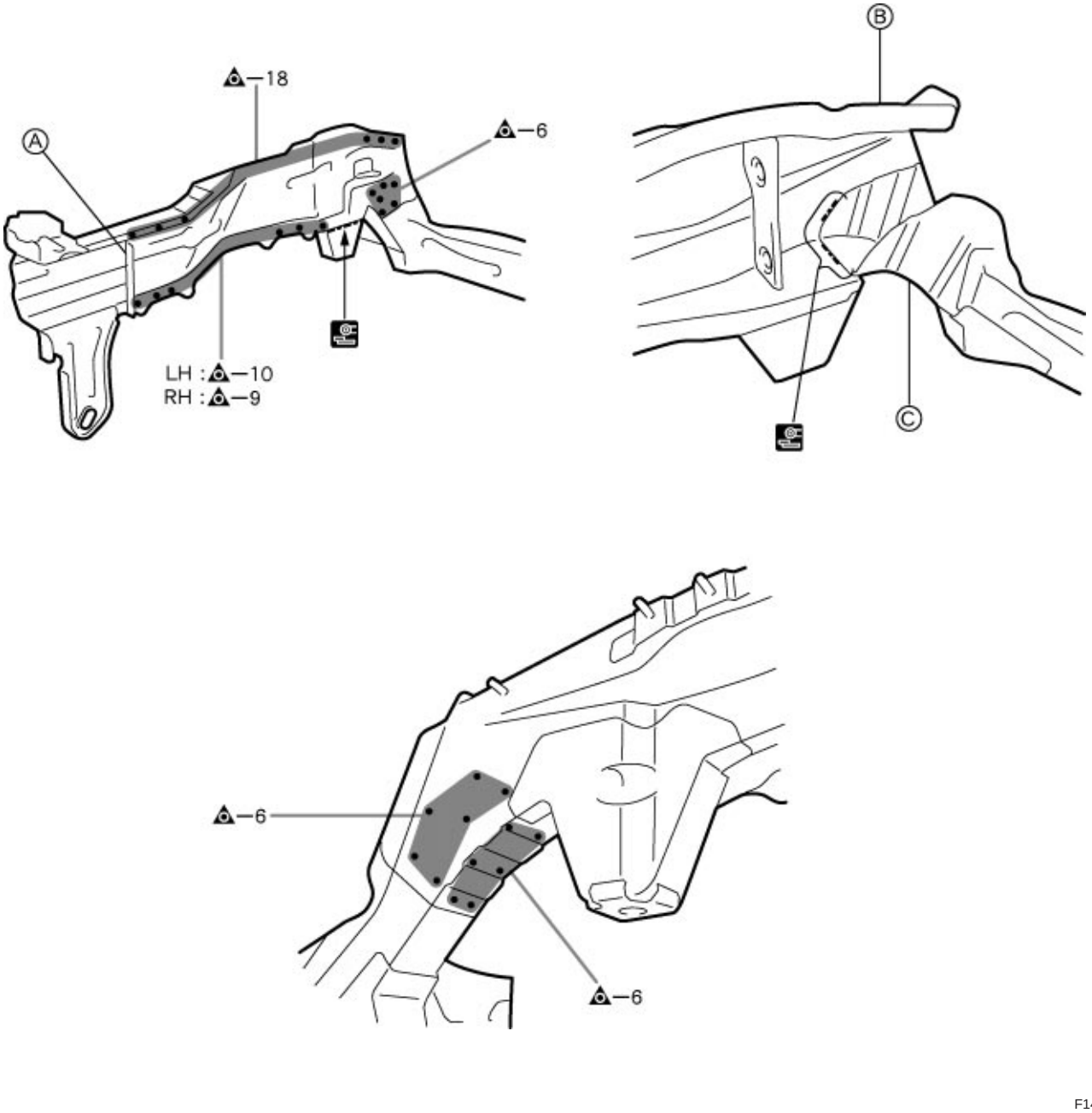

F14479

POINT

1 Remove the Ⓐ from the new parts. And then, separate the Ⓑ and Ⓒ at the welded part.

PART NAME

Ⓐ Front Side Member Outer Plate Ⓑ Front Side Inner Member
Ⓒ Front Side Inner Rear Member

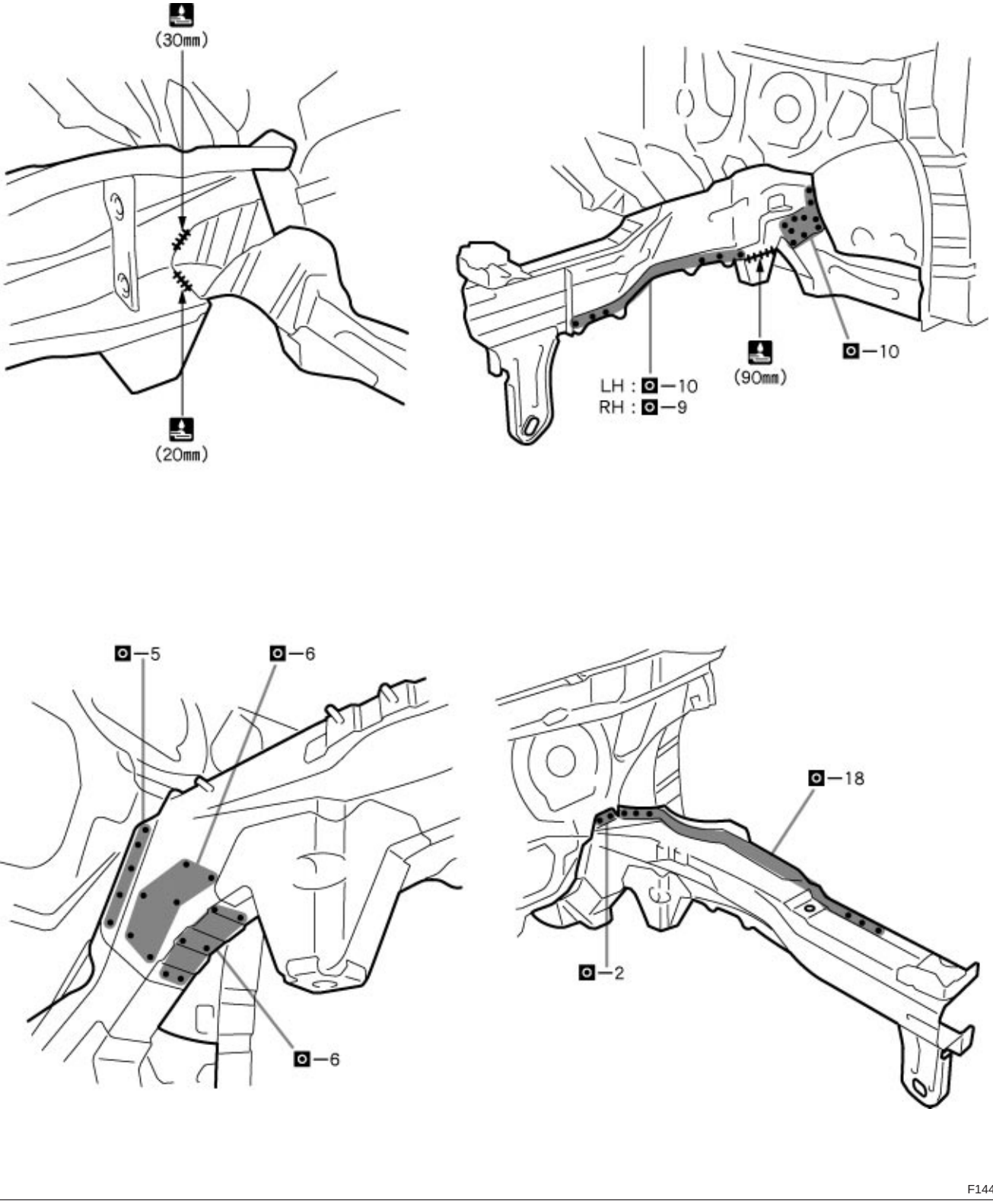

POINT

1 Install Ⓐ and Ⓑ removed from the new parts to the vehicle.

20mm (0.79in.) 30mm (1.18in.) 90mm (3.54in.)

FRONT BODY PILLAR (CUT)

REMOVAL
With the cowl top side panel removed.



F14481-A

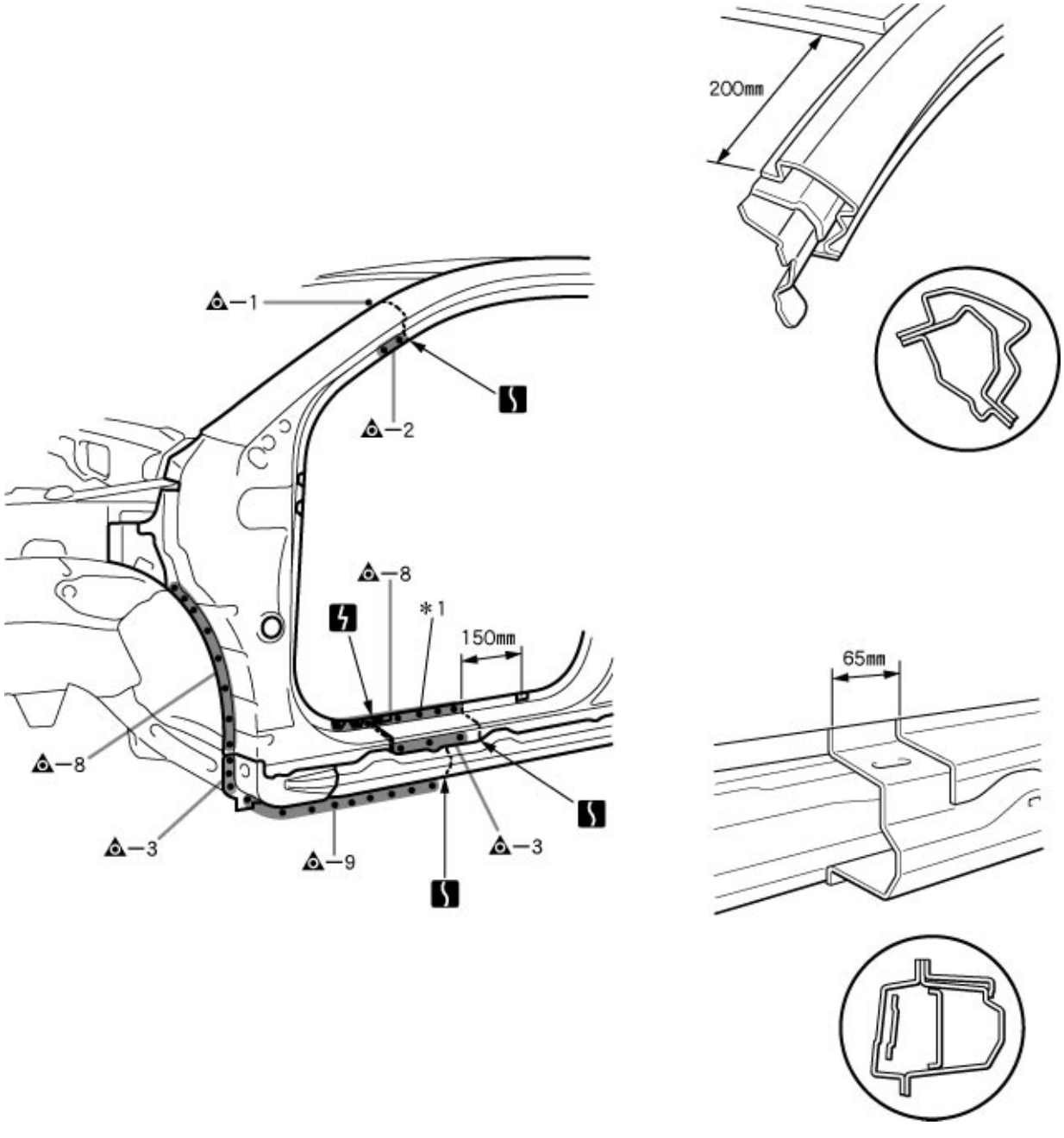

F14481

POINT
1 *1: This part of the outer panel is reused, because the rocker panel section is cut off at the rear position behind the supplied parts cut position of the outer panel.

65mm (2.56in.) 150mm (5.91in.) 200mm (7.87in.)

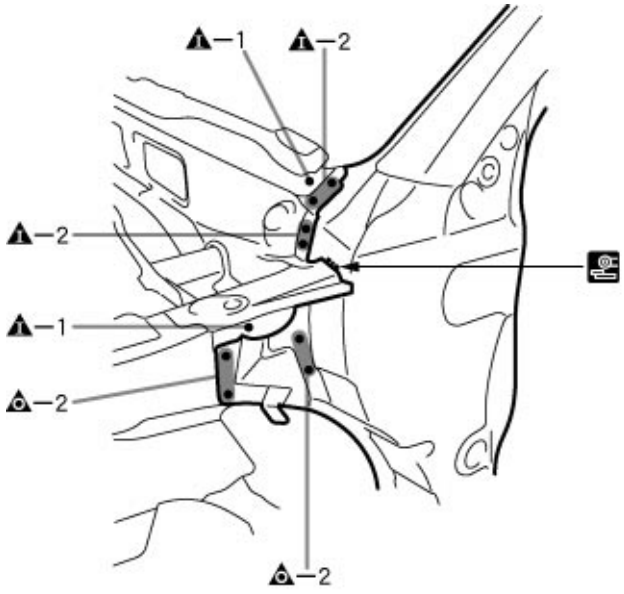

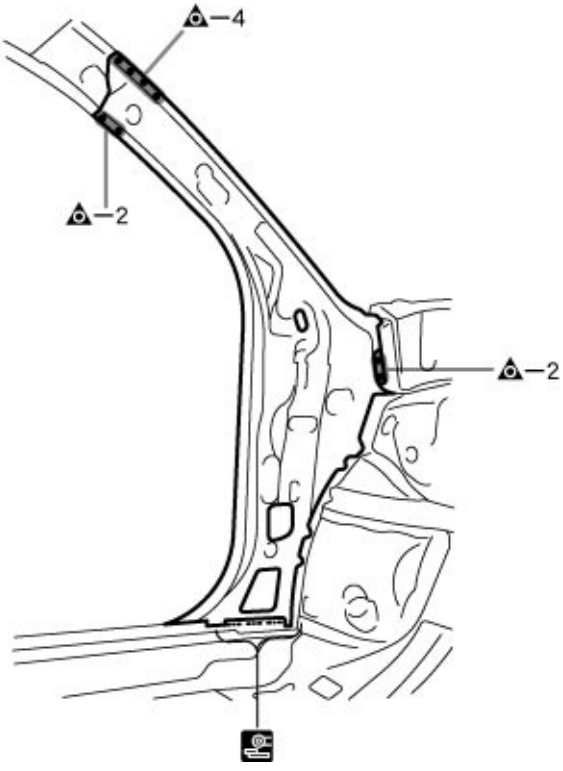

F14482

INSTALLATION

- Temporarily install the new parts and measure each part of the new parts in accordance with the body dimension diagram. (See the body dimension diagram)
- Inspect the fitting of the related parts around the new parts before welding. This affects the appearance of the finish.
- After welding, apply the polyurethane foam to the corresponding parts.
- After welding, apply body sealer and under-coating to the corresponding parts.
- After applying the top coat layer, apply anti-rust agent to the inside of the necked section structural weld spots.

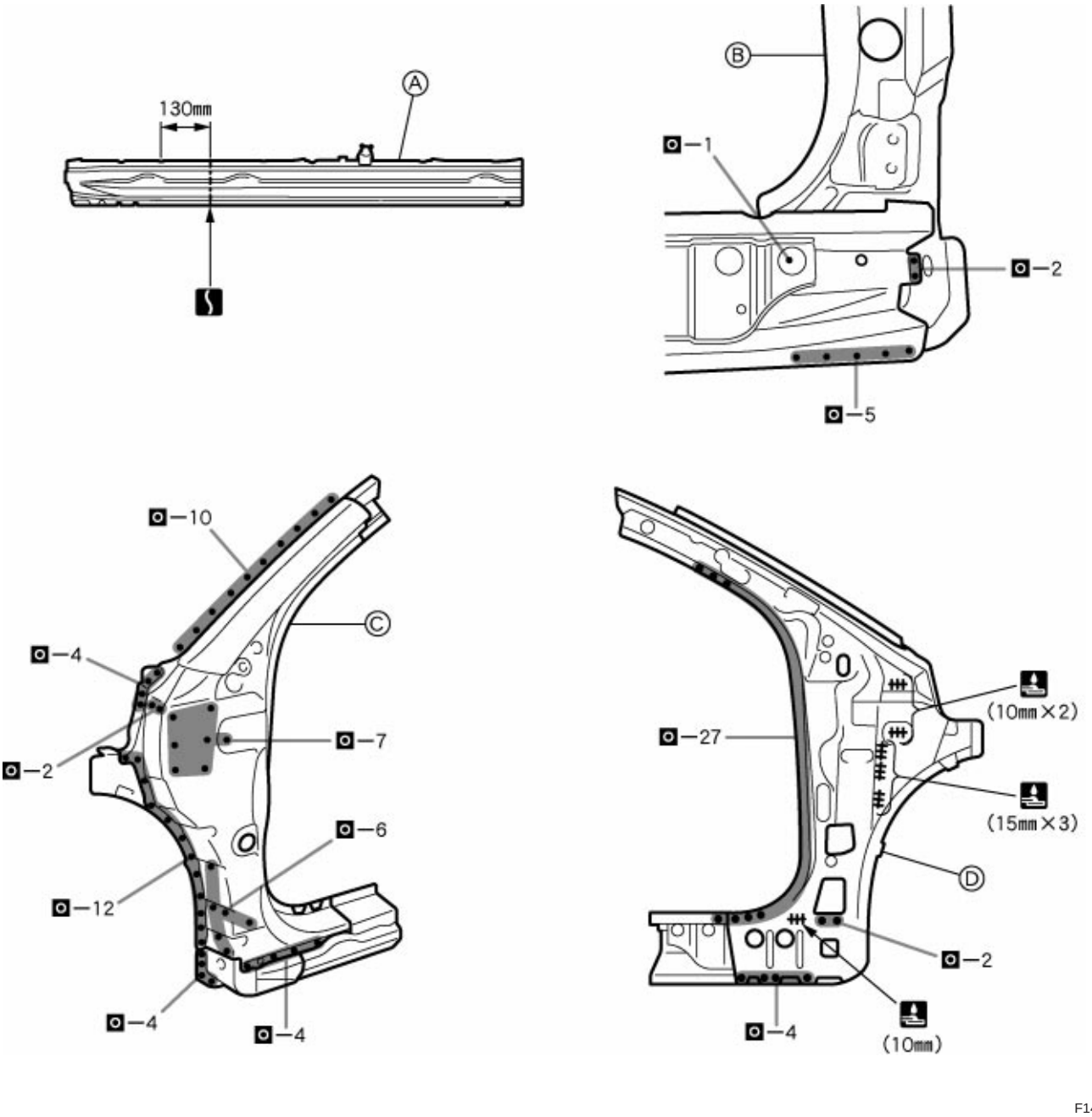

POINT

1 Before temporarily installing the new parts, weld the Ⓐ, Ⓑ, Ⓒ and Ⓓ with standard points.

PART NAME

Ⓐ Rocker Outer Reinforce Ⓑ Front Body Pillar Upper Reinforce Ⓒ Pillar Outer Ⓓ Pillar Inner

10mm (0.39in.) 15mm (0.59in.) 130mm (5.12in.)

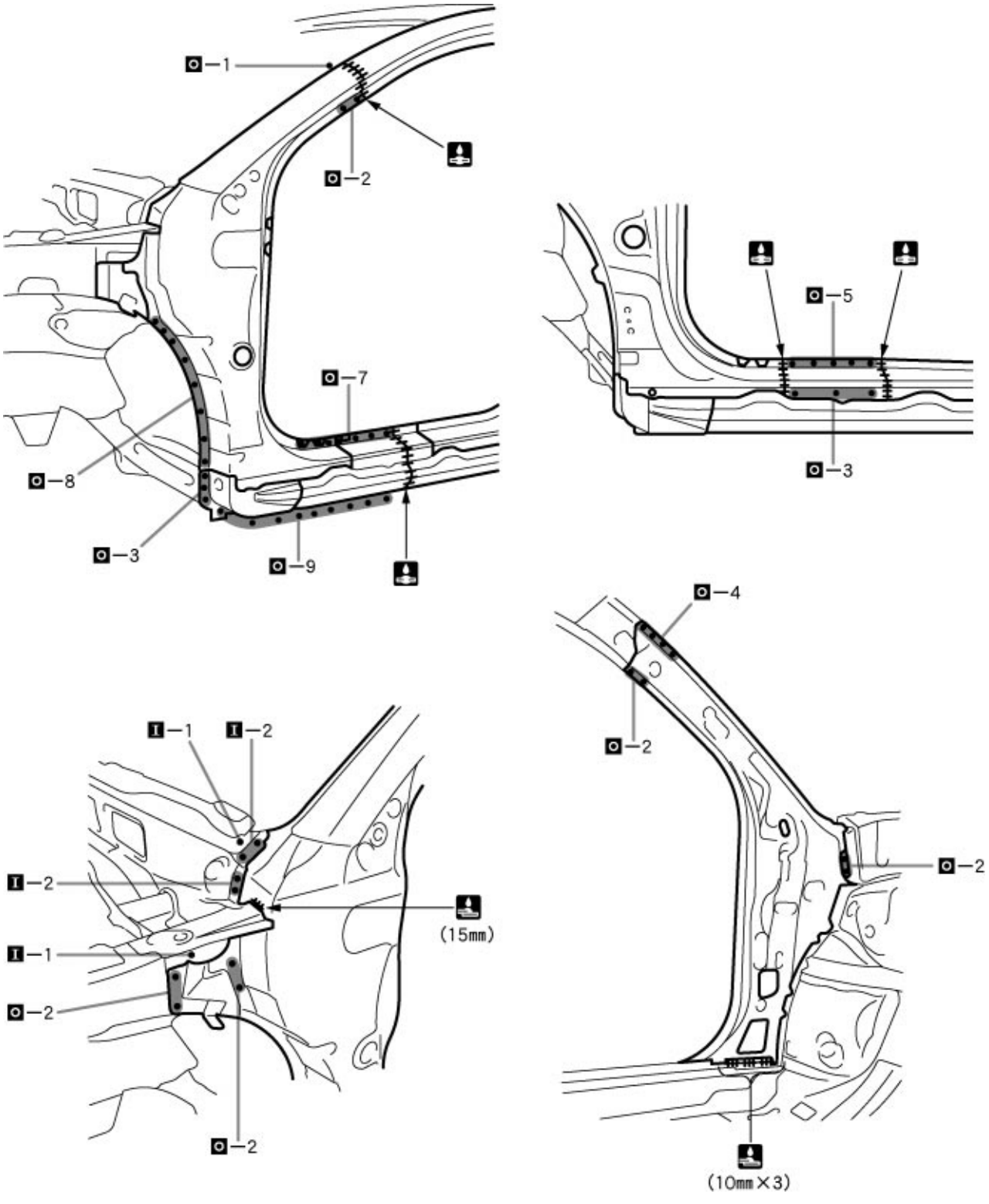

F14484

10mm (0.39in.) 15mm (0.59in.)

CENTER BODY PILLAR (CUT)

REMOVAL



F14485-A

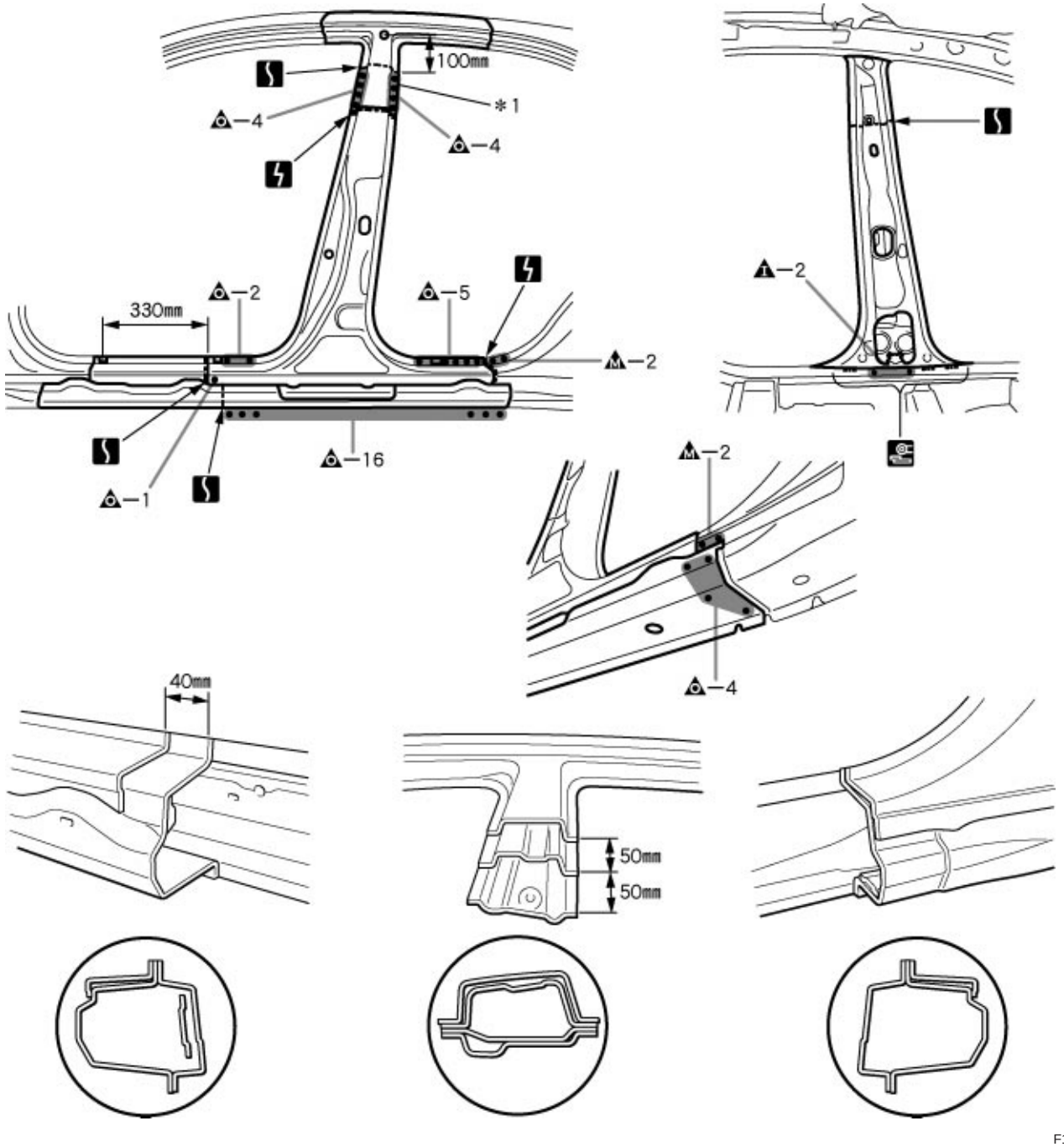

F14485

POINT

1 *1: This part of the outer panel is reused, because the center pillar section is cut off at the upper position above the supplied parts cut position of the outer panel.

40mm (1.57in.) 50mm (1.97in.) 100mm (3.94in.) 330mm (12.99in.)

INSTALLATION

- Temporarily install the new parts and measure each part of the new parts in accordance with the body dimension diagram. (See the body dimension diagram)
- Inspect the fitting of the related parts around the new parts before welding. This affects the appearance of the finish.
- After welding, apply the polyurethane foam to the corresponding parts.
- After welding, apply body sealer and under-coating to the corresponding parts.
- After applying the top coat layer, apply anti-rust agent to the inside of the necked section structural weld spots.

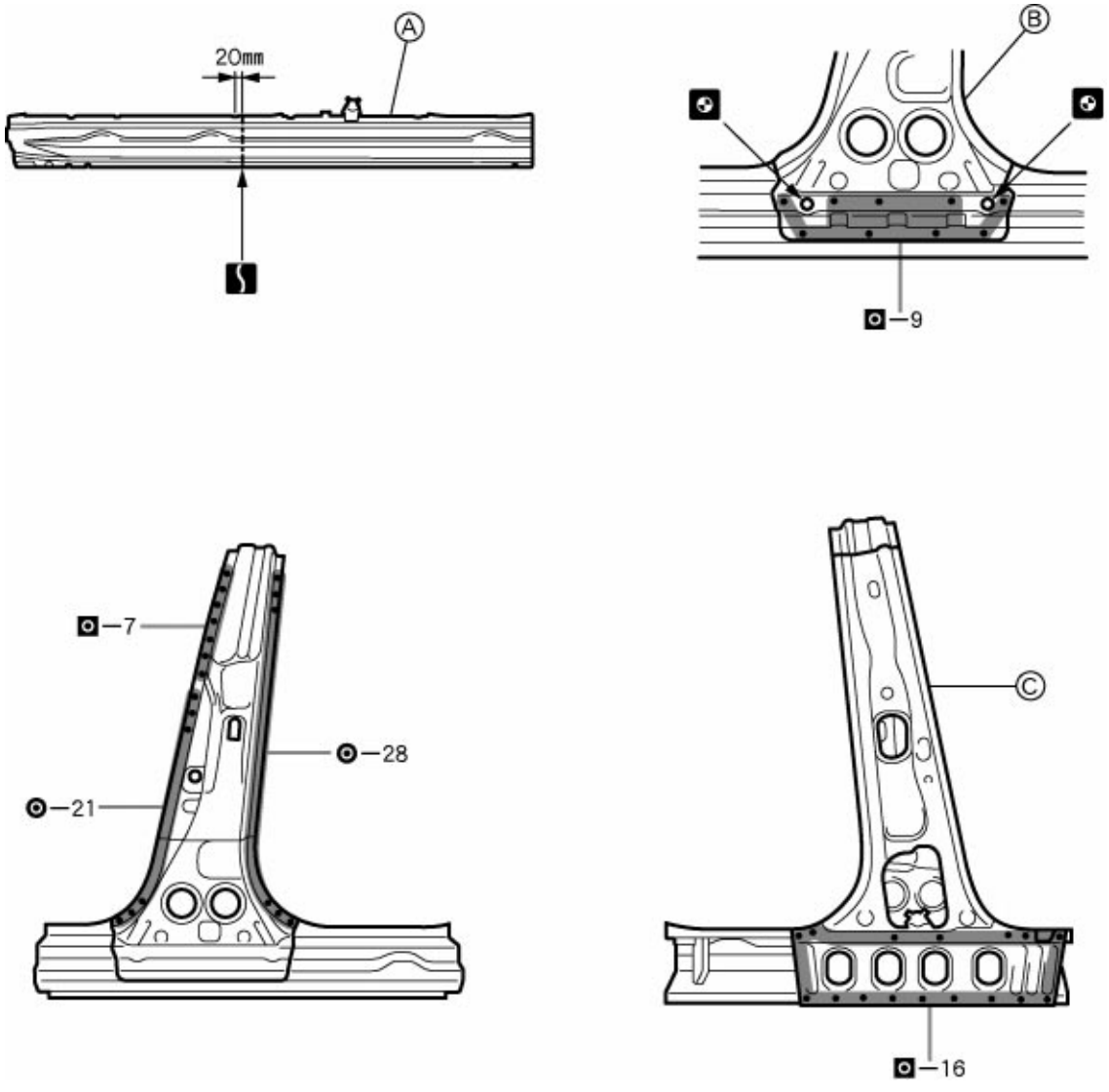

F14486

POINT

1 Before temporarily installing the new parts, weld the Ⓐ, Ⓑ and Ⓒ with standard points.

PART NAME

Ⓐ Rocker Outer Reinforce Ⓑ Center Body Pillar Reinforcement Ⓒ Center Body Inner Pillar

20mm (0.79in.)

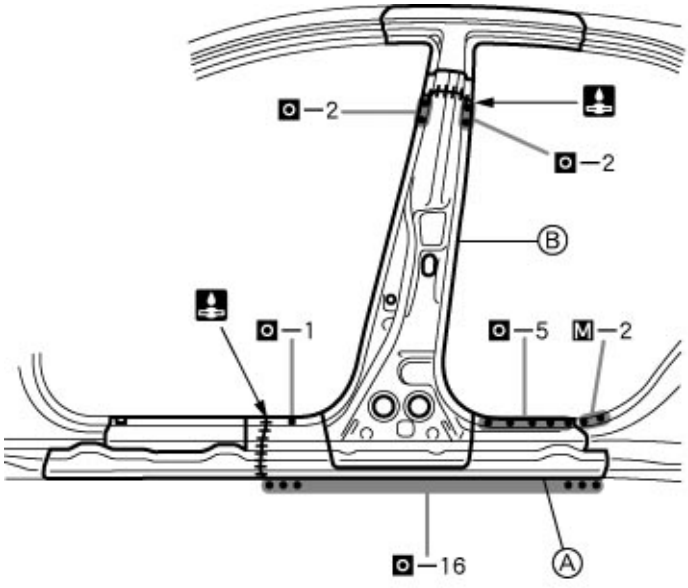

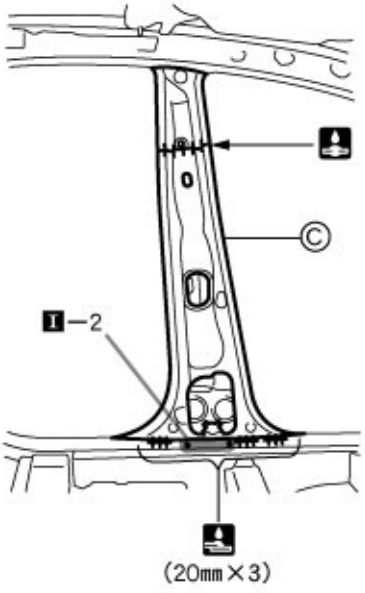

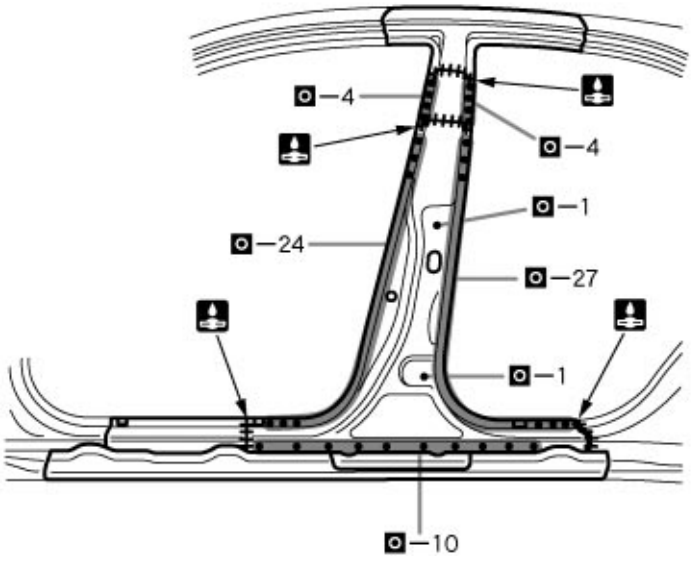

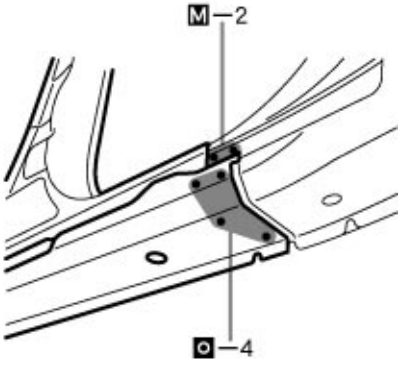

F14487

POINT

2 After welding the Ⓐ, Ⓑ and Ⓒ to the vehicle install the outer panel.

PART NAME

Ⓐ Rocker Outer Reinforce Ⓑ Center Body Pillar Reinforcement Ⓒ Center Body Inner Pillar

20mm (0.79in.)

FRONT DOOR OUTER PANEL (ASSY)

REMOVAL



F14488-A

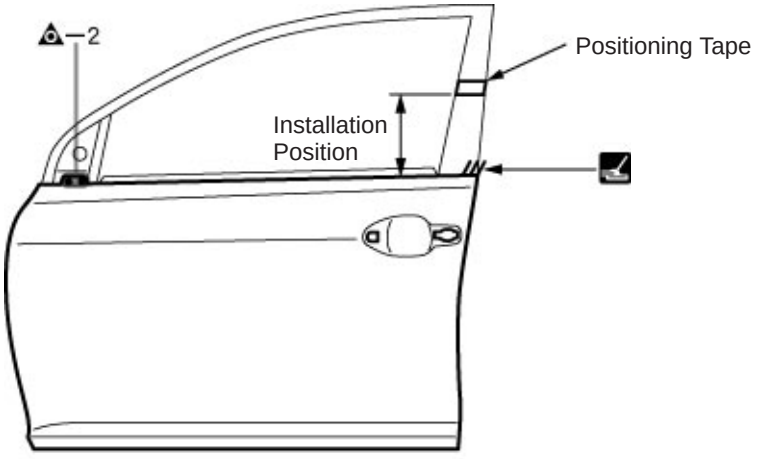

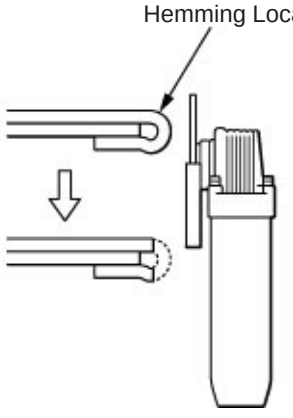

F14488

POINT

1 Before removing the outer panel, make the installation position with a tape.
2 After grinding off the hemming location, remove the outer panel.

INSTALLATION

- Temporarily install the new parts and measure each part of the new parts in accordance with the body dimension diagram. (See the body dimension diagram)
- Inspect the fitting of the related parts around the new parts before welding. This affects the appearance of the finish.
- After welding, apply the polyurethane foam to the corresponding parts.
- After welding, apply body sealer and under-coating to the corresponding parts.
- After applying the top coat layer, apply anti-rust agent to the inside of the necked section structural weld spots.

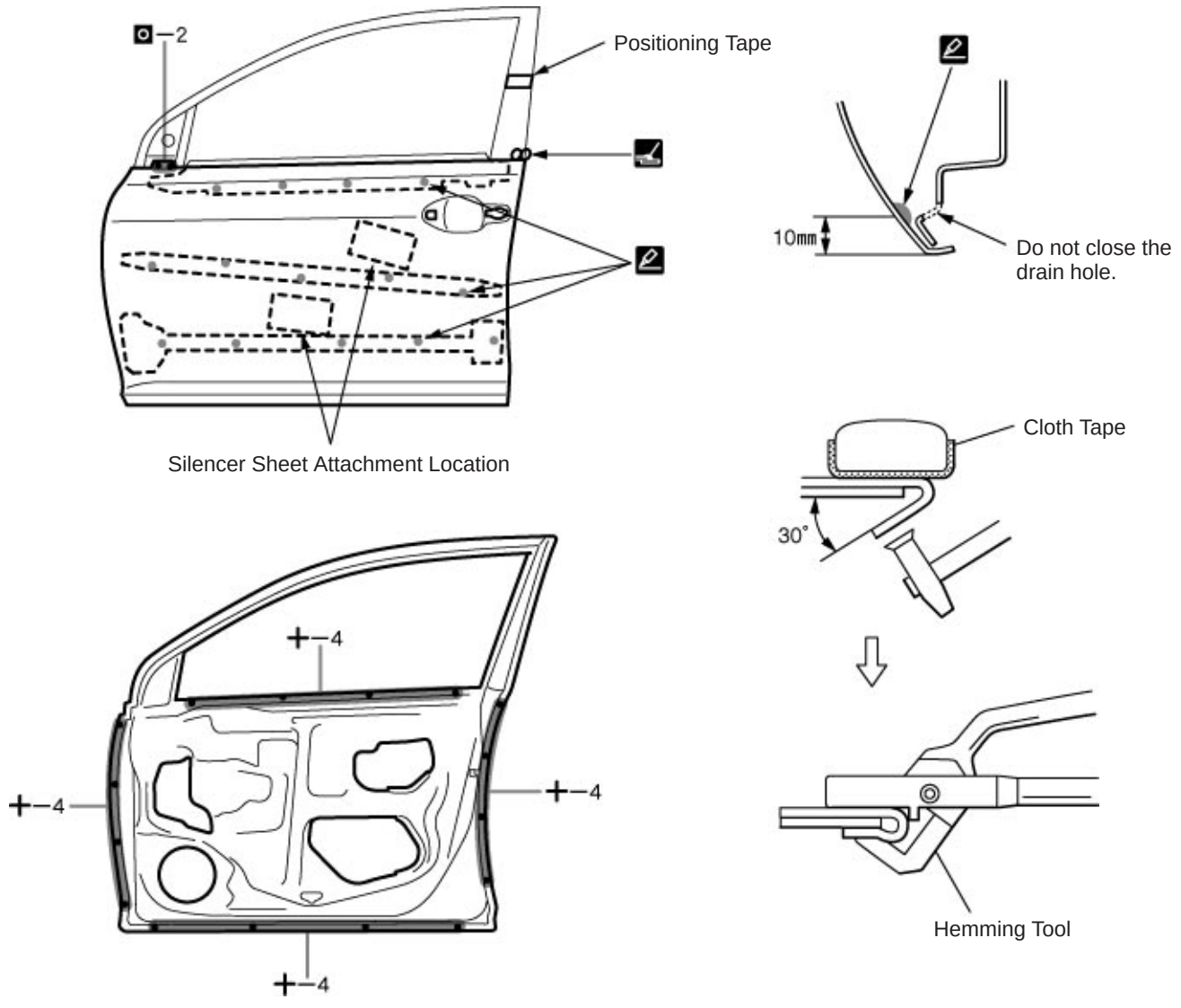

POINT

1 Before temporarily installing the new parts, apply body sealer to the reinforcement, side impact protection beam and back side of the new parts.
HINT:
1) Apply sealer evenly about 10mm (0.39in.) from the flange and 3mm (0.12in.) in diameter to the outer panel and apply just enough sealer for the reinforcement and side impact protection beam to make contact.

2 Bend the flange hem about 30° with a hammer and dolly, then fasten tightly with a hemming tool.
HINT:
1) Perform hemming in three steps, being careful not to warp the panel.
2) If a hemming tool cannot be used, hem with a hammer and dolly.

REAR DOOR OUTER PANEL (ASSY)



F14490-A

REMOVAL

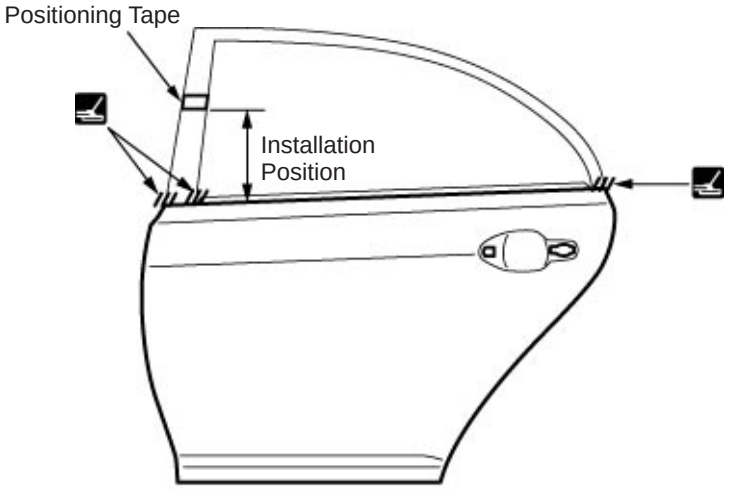

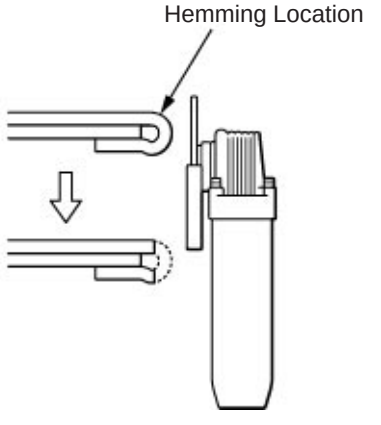

F14490

POINT

1 Before removing the outer panel, make the installation position with a tape.
2 After grinding off the hemming location, remove the outer panel.

INSTALLATION

- Temporarily install the new parts and measure each part of the new parts in accordance with the body dimension diagram. (See the body dimension diagram)
- Inspect the fitting of the related parts around the new parts before welding. This affects the appearance of the finish.
- After welding, apply the polyurethane foam to the corresponding parts.
- After welding, apply body sealer and under-coating to the corresponding parts.
- After applying the top coat layer, apply anti-rust agent to the inside of the necked section structural weld spots.

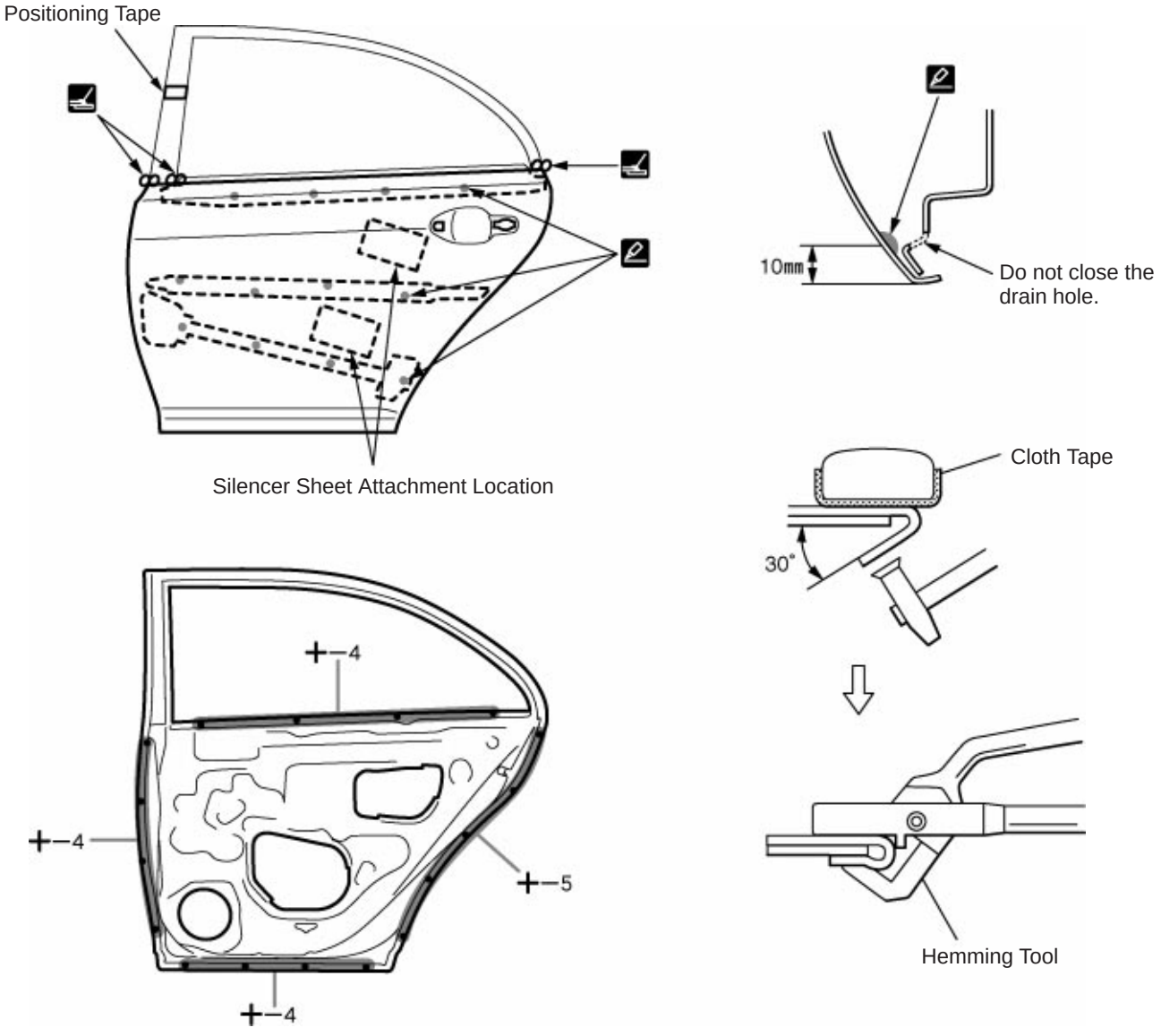

F14491

POINT

1 Before temporarily installing the new parts, apply body sealer to the reinforcement, side impact protection beam and back side of the new parts.
HINT:
1) Apply sealer evenly about 10mm (0.39in.) from the flange and 3mm (0.12in.) in diameter to the outer panel and apply just enough sealer for the reinforcement and side impact protection beam to make contact.

2 Bend the flange hem about 30° with a hammer and dolly, then fasten tightly with a hemming tool.
HINT:
1) Perform hemming in three steps, being careful not to warp the panel.
2) If a hemming tool cannot be used, hem with a hammer and dolly.

ROCKER OUTER PANEL (CUT-H)



F14492-A

REMOVAL

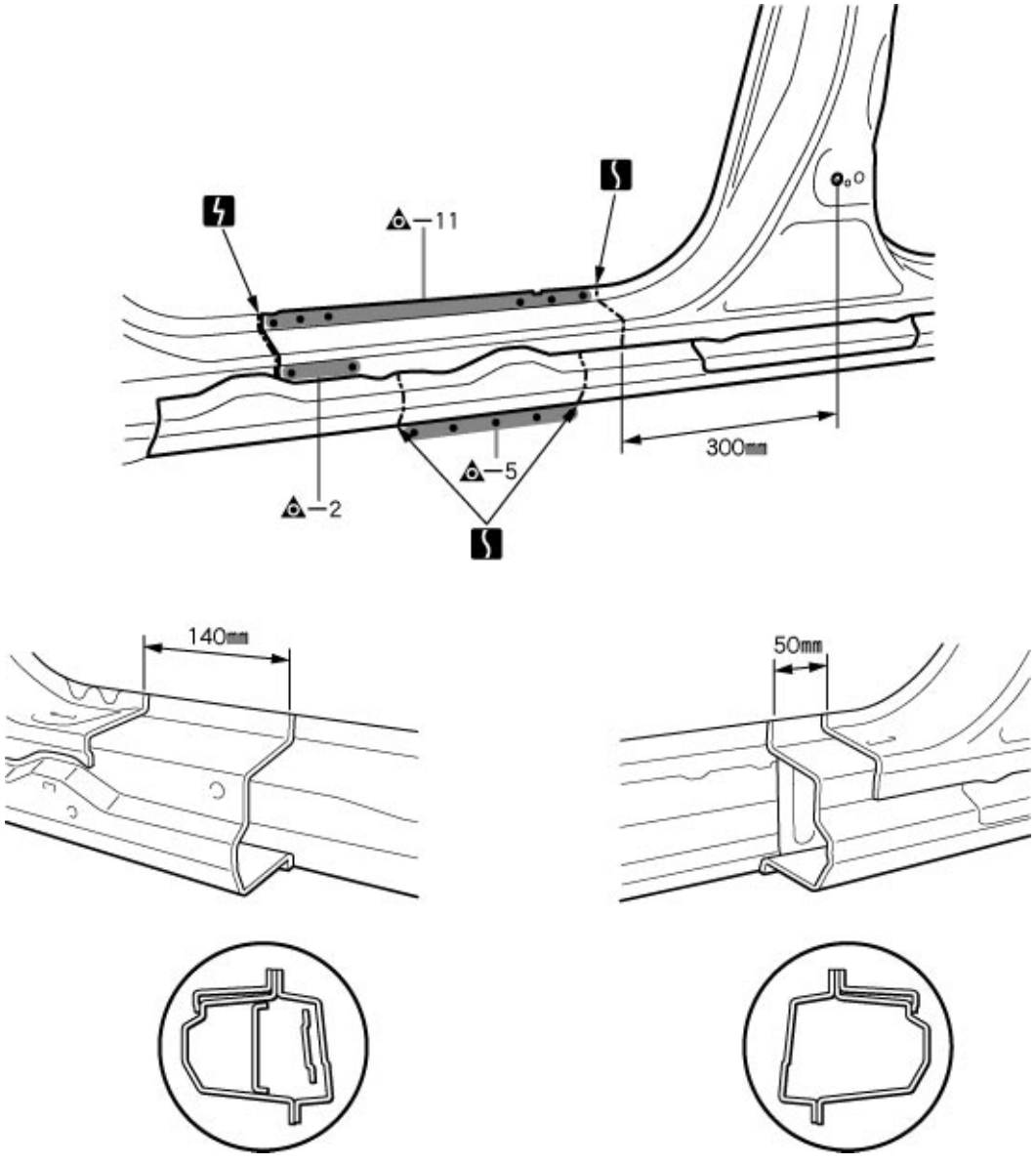

F14492

50mm (1.97in.) 140mm (5.51in.) 300mm (11.81in.)

INSTALLATION

- Temporarily install the new parts and measure each part of the new parts in accordance with the body dimension diagram. (See the body dimension diagram)
- Inspect the fitting of the related parts around the new parts before welding. This affects the appearance of the finish.
- After welding, apply the polyurethane foam to the corresponding parts.
- After welding, apply body sealer and under-coating to the corresponding parts.
- After applying the top coat layer, apply anti-rust agent to the inside of the necked section structural weld spots.

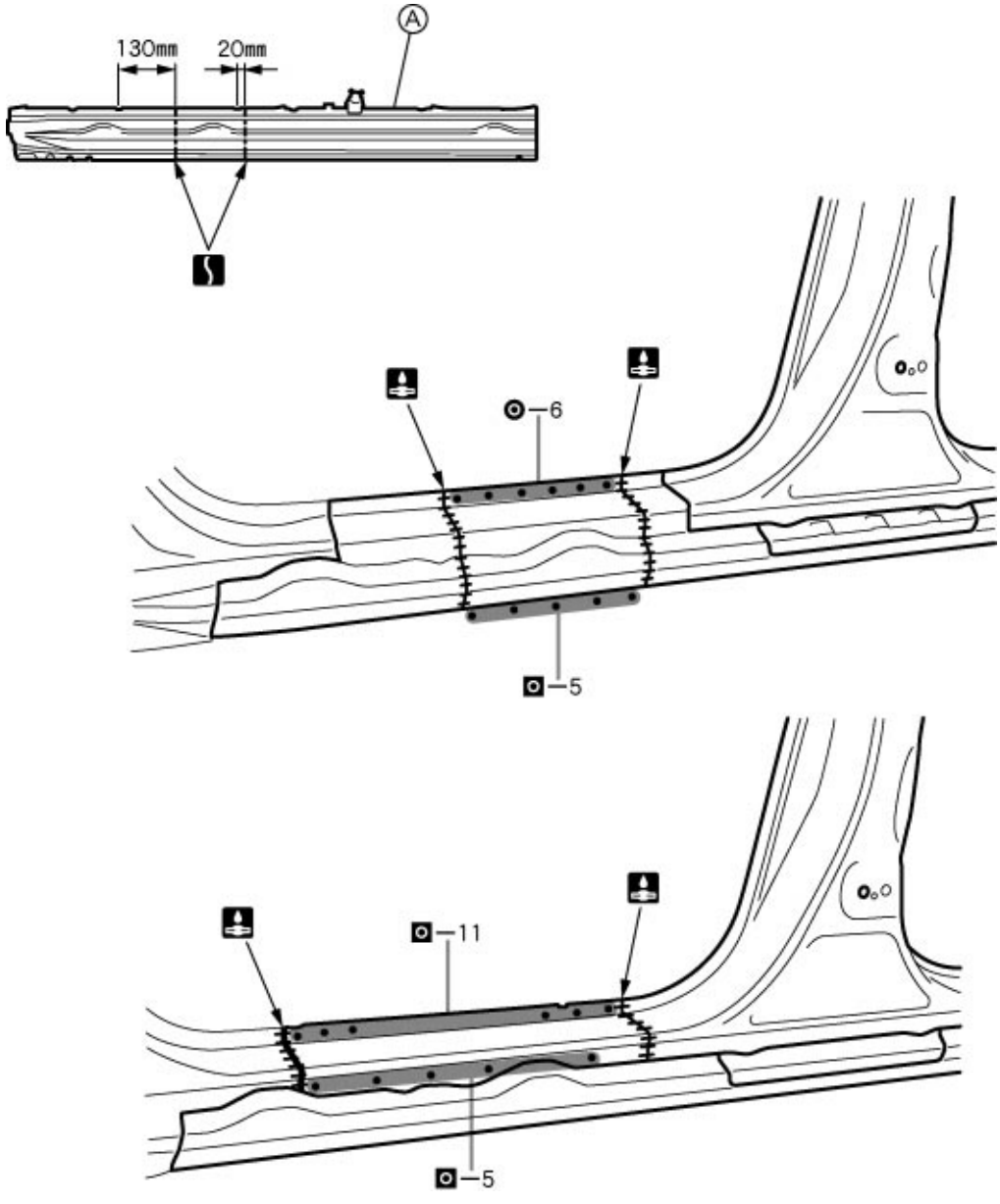

F14493

POINT

1 After welding the Ⓐ to the vehicle install the outer panel.

PART NAME

Ⓐ Rocker Outer Reinforce

20mm (0.79in.) 130mm (5.12in.)

ROCKER OUTER PANEL (CUT)



F14494-A

REMOVAL

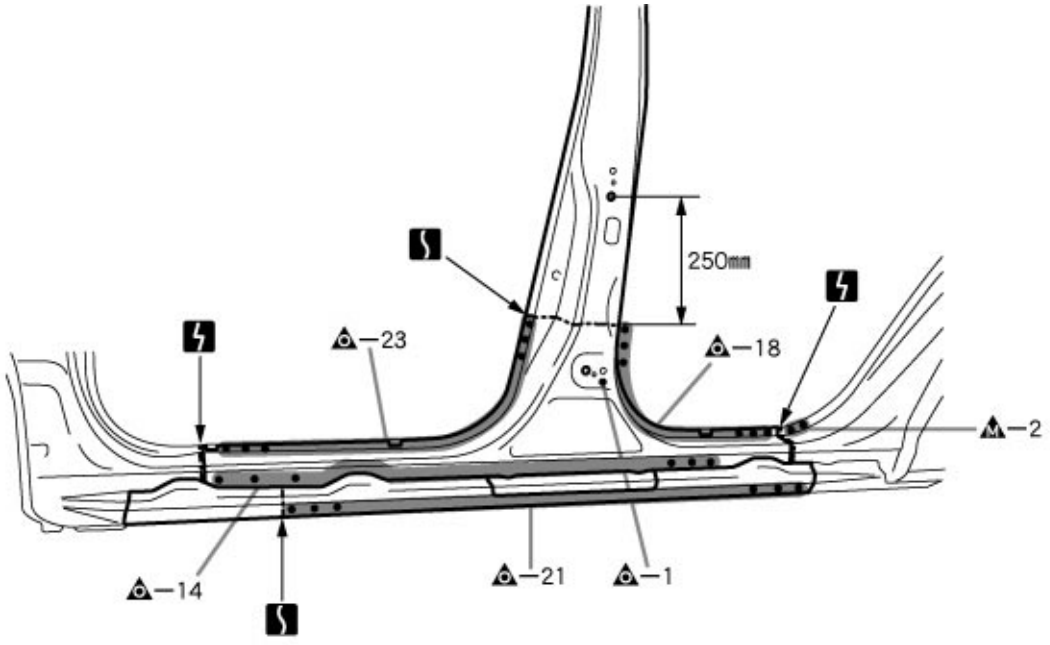

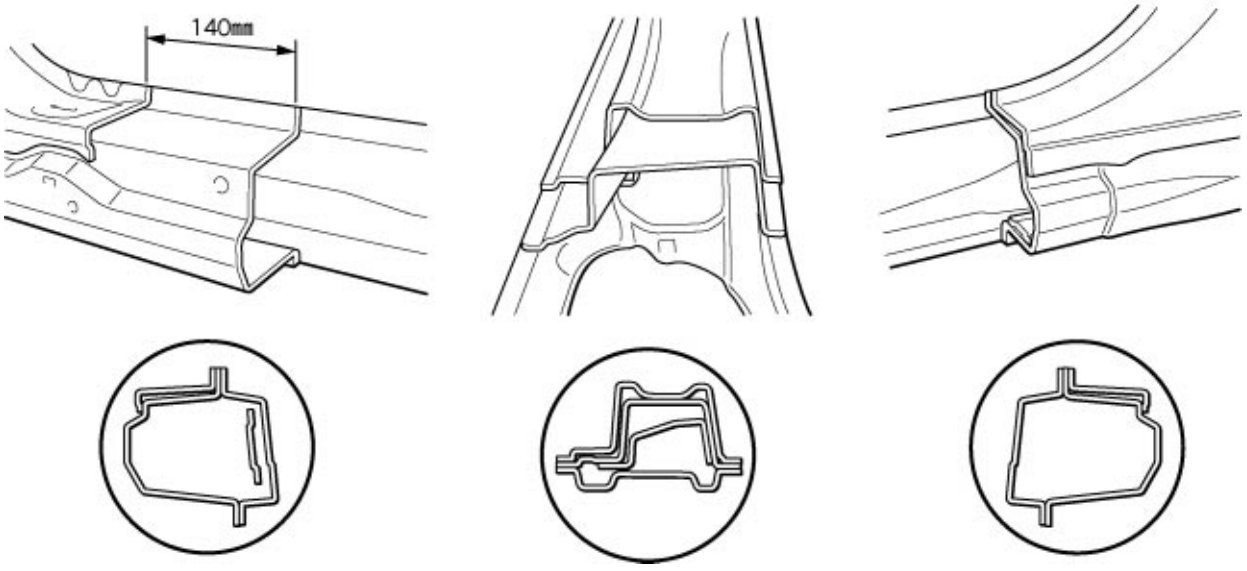

F14494

140mm (5.51in.) 250mm (9.84in.)

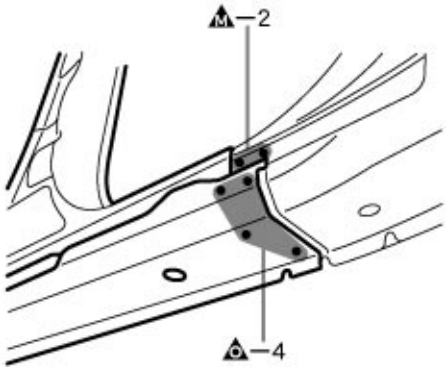

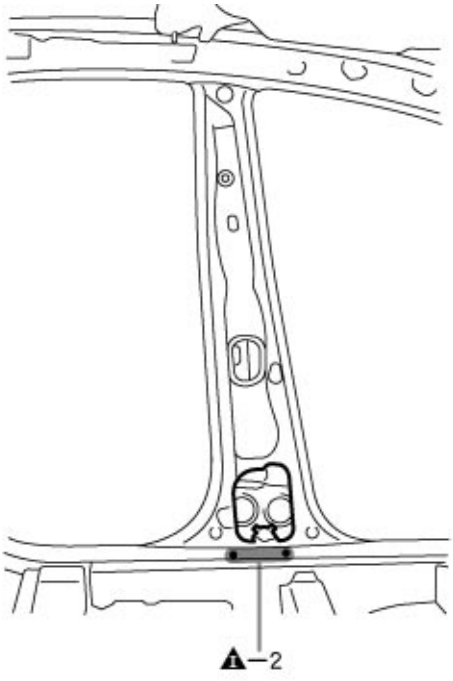

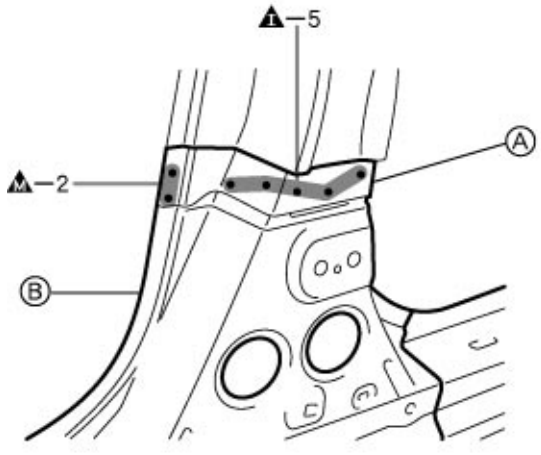

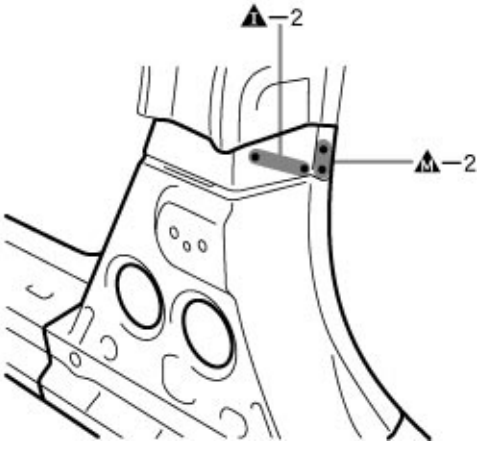

F14495

POINT

1 Leave the Ⓐ to the vehicle, remove the Ⓑ.

PART NAME

Ⓐ Center Body Pillar Reinforcement Ⓑ Center Body Pillar Outer Reinforcement

INSTALLATION

- Temporarily install the new parts and measure each part of the new parts in accordance with the body dimension diagram. (See the body dimension diagram)
- Inspect the fitting of the related parts around the new parts before welding. This affects the appearance of the finish.
- After welding, apply the polyurethane foam to the corresponding parts.
- After welding, apply body sealer and under-coating to the corresponding parts.
- After applying the top coat layer, apply anti-rust agent to the inside of the necked section structural weld spots.

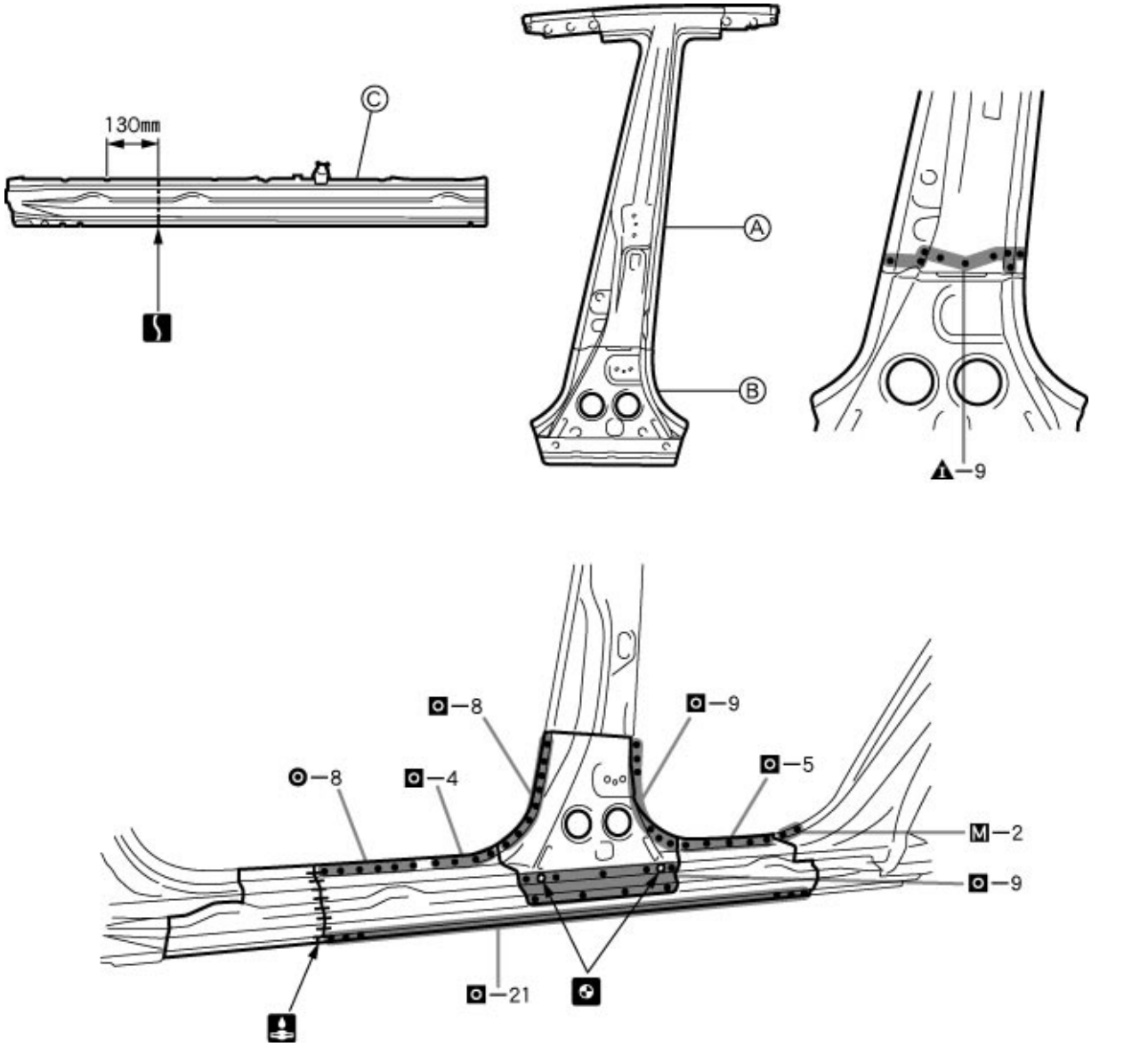

F14496

POINT

1 Remove the Ⓑ from the Ⓐ.
2 After welding the Ⓑ and Ⓒ to the vehicle install the outer panel.
3 Determine the position of the new parts by the assembly marks of the Ⓑ and Ⓒ.

PART NAME

Ⓐ Center Body Pillar Reinforcement
Ⓑ Center Body Pillar Outer Reinforcement
Ⓒ Rocker Outer Reinforce

130mm (5.12in.)

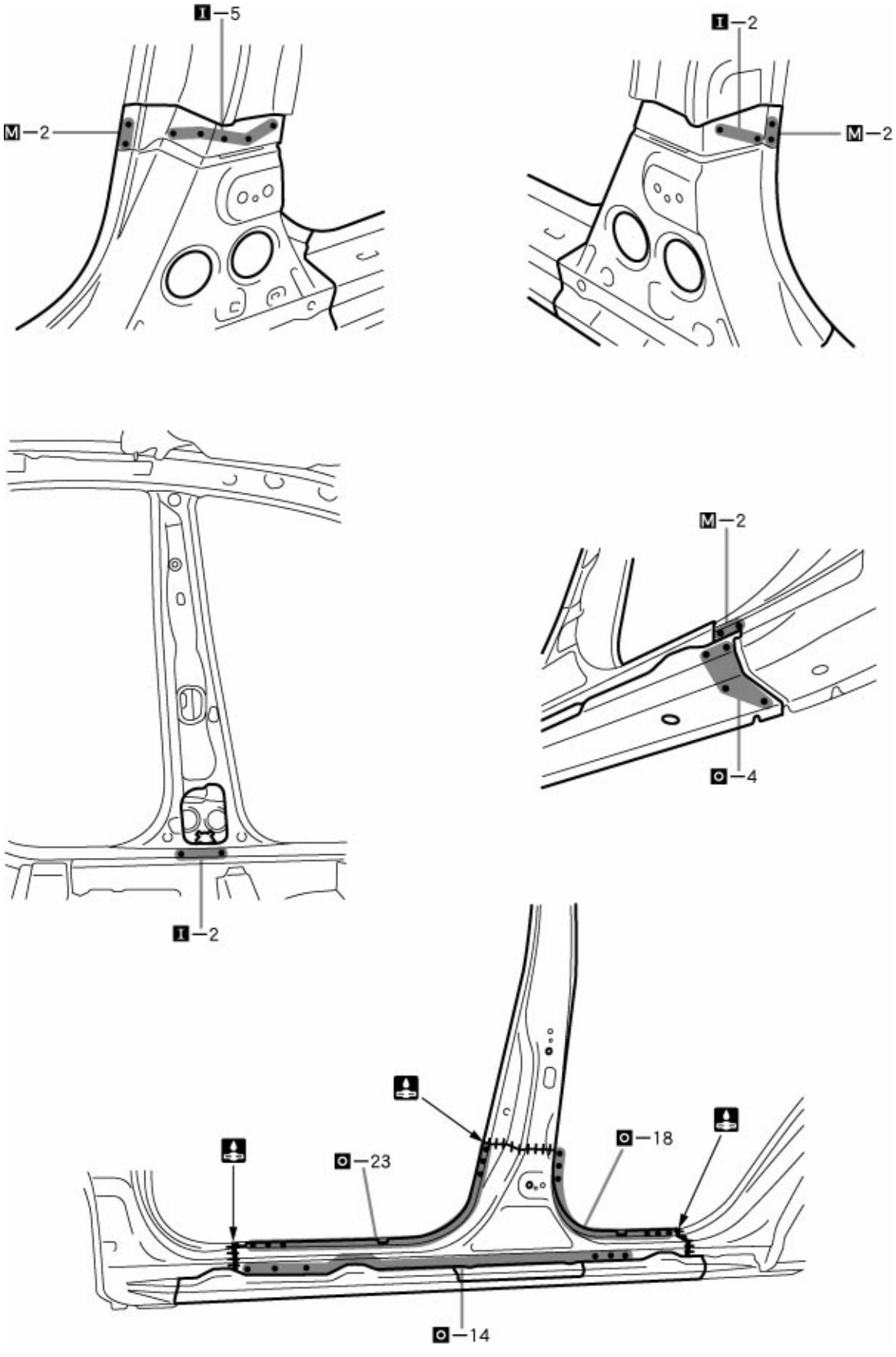
I—5
M—2
I—2
M—2
M—2
O—4
I—2
O—18
O—23
O—14
F14497

NO.1 LOWER OUTER RAIL (ASSY)

REMOVAL
With the quarter panel removed.



F14498-A

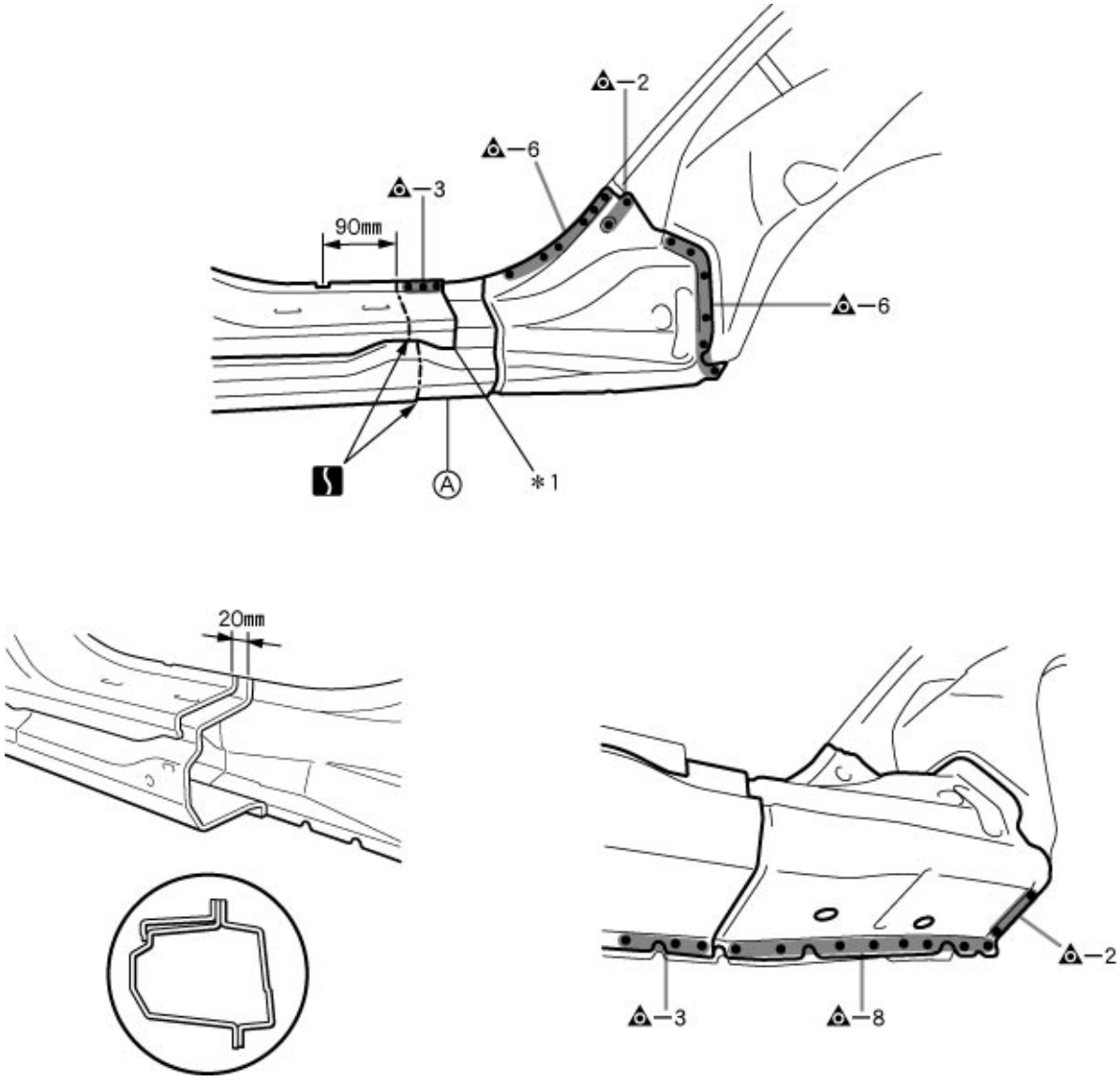

F14498

POINT
1 *1: This part of the outer panel is reused, because the rocker panel section is cut off at the front position in front of the supplied parts cut position of the outer panel.

PART NAME
Ⓐ Rocker Outer Reinforce

20mm (0.79in.) 90mm (3.54in.)

INSTALLATION

- Temporarily install the new parts and measure each part of the new parts in accordance with the body dimension diagram. (See the body dimension diagram)
- Inspect the fitting of the related parts around the new parts before welding. This affects the appearance of the finish.
- After welding, apply the polyurethane foam to the corresponding parts.
- After welding, apply body sealer and under-coating to the corresponding parts.
- After applying the top coat layer, apply anti-rust agent to the inside of the necked section structural weld spots.

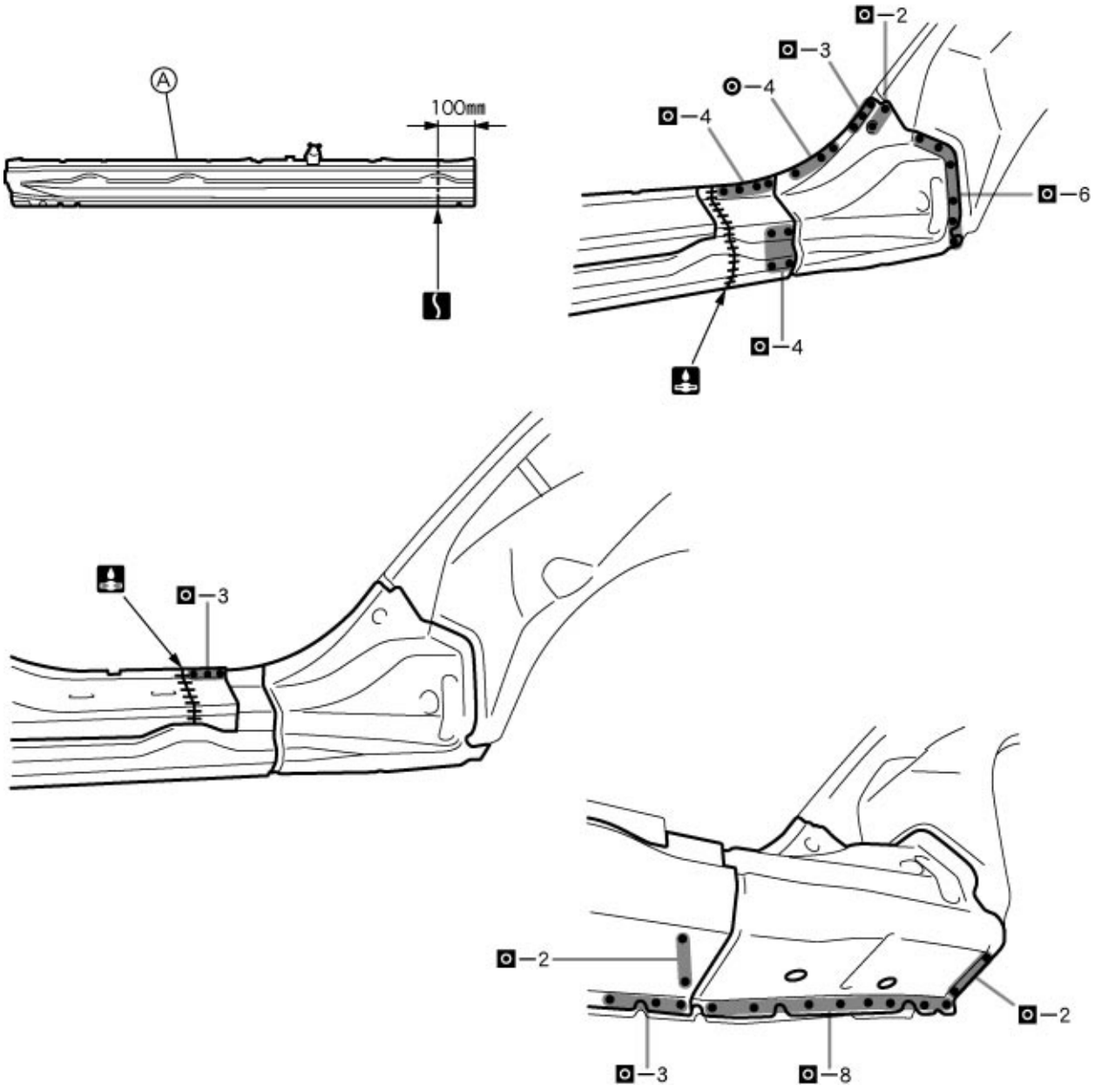

F14499

PART NAME

Ⓐ Rocker Outer Reinforce

100mm (3.94in.)

QUARTER PANEL (CUT): Sedan



F14500-A

REMOVAL

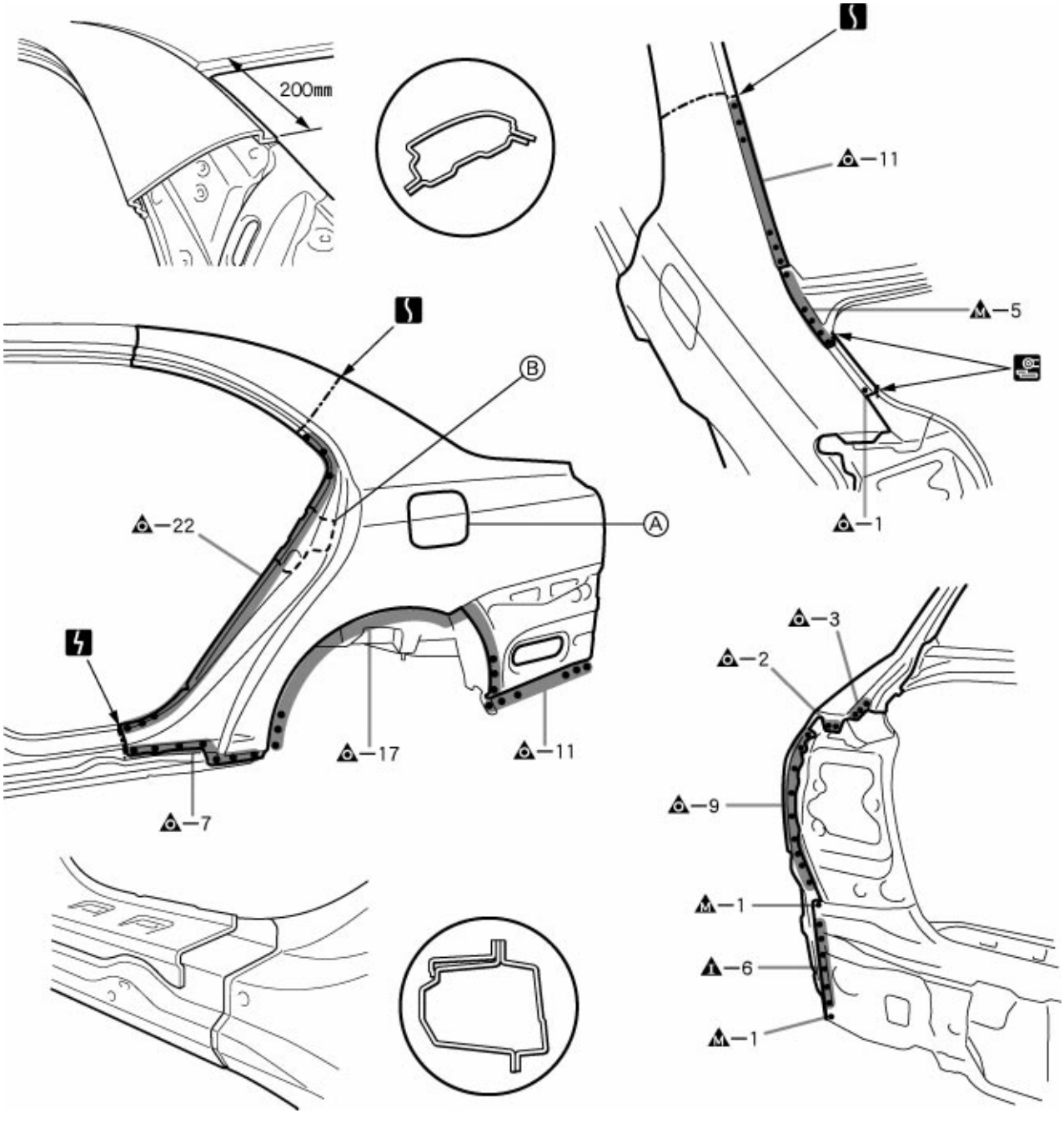

F14500

POINT

1 Remove the Ⓑ at the same time.

PART NAME

Ⓐ Fuel Filler Opening Lid Ⓑ Quarter Lock Pillar

200mm (7.87in.)

INSTALLATION

- Temporarily install the new parts and measure each part of the new parts in accordance with the body dimension diagram. (See the body dimension diagram)
- Inspect the fitting of the related parts around the new parts before welding. This affects the appearance of the finish.
- After welding, apply the polyurethane foam to the corresponding parts.
- After welding, apply body sealer and under-coating to the corresponding parts.
- After applying the top coat layer, apply anti-rust agent to the inside of the necked section structural weld spots.

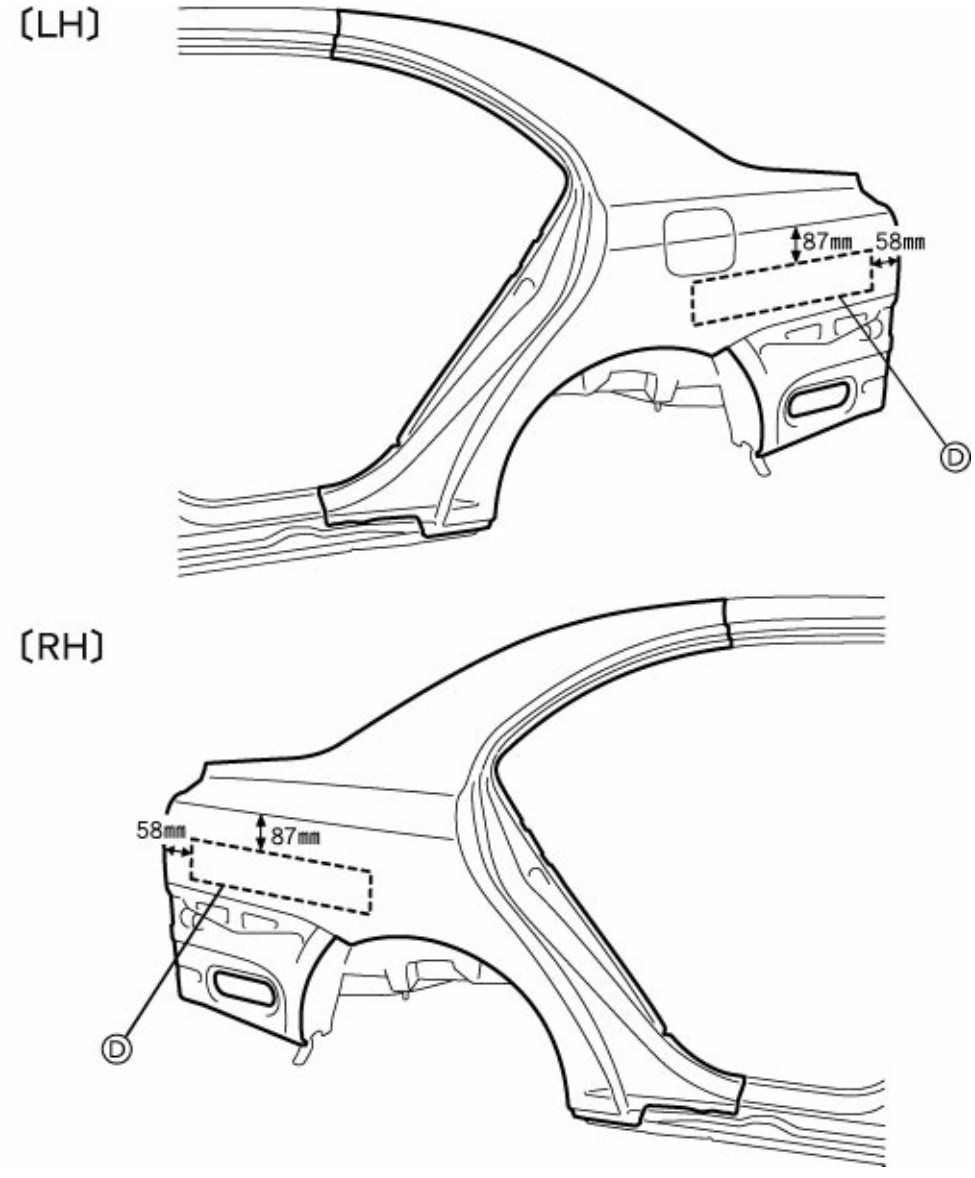

F14624

POINT

1 Before initial spot welding the new parts, attach the quarter panel silencer sheet to the inside of the quarter panel, at the position indicated on the diagram above.
HINT:
1) Use the quarter panel silencer sheet (Part No. 67813-44010).

PART NAME

Ⓐ Quarter Panel Silencer Sheet

58mm (2.28in.) 87mm (3.43in.)

INSTALLATION

- Temporarily install the new parts and measure each part of the new parts in accordance with the body dimension diagram. (See the body dimension diagram)
- Inspect the fitting of the related parts around the new parts before welding. This affects the appearance of the finish.
- After welding, apply the polyurethane foam to the corresponding parts.
- After welding, apply body sealer and under-coating to the corresponding parts.
- After applying the top coat layer, apply anti-rust agent to the inside of the necked section structural weld spots.

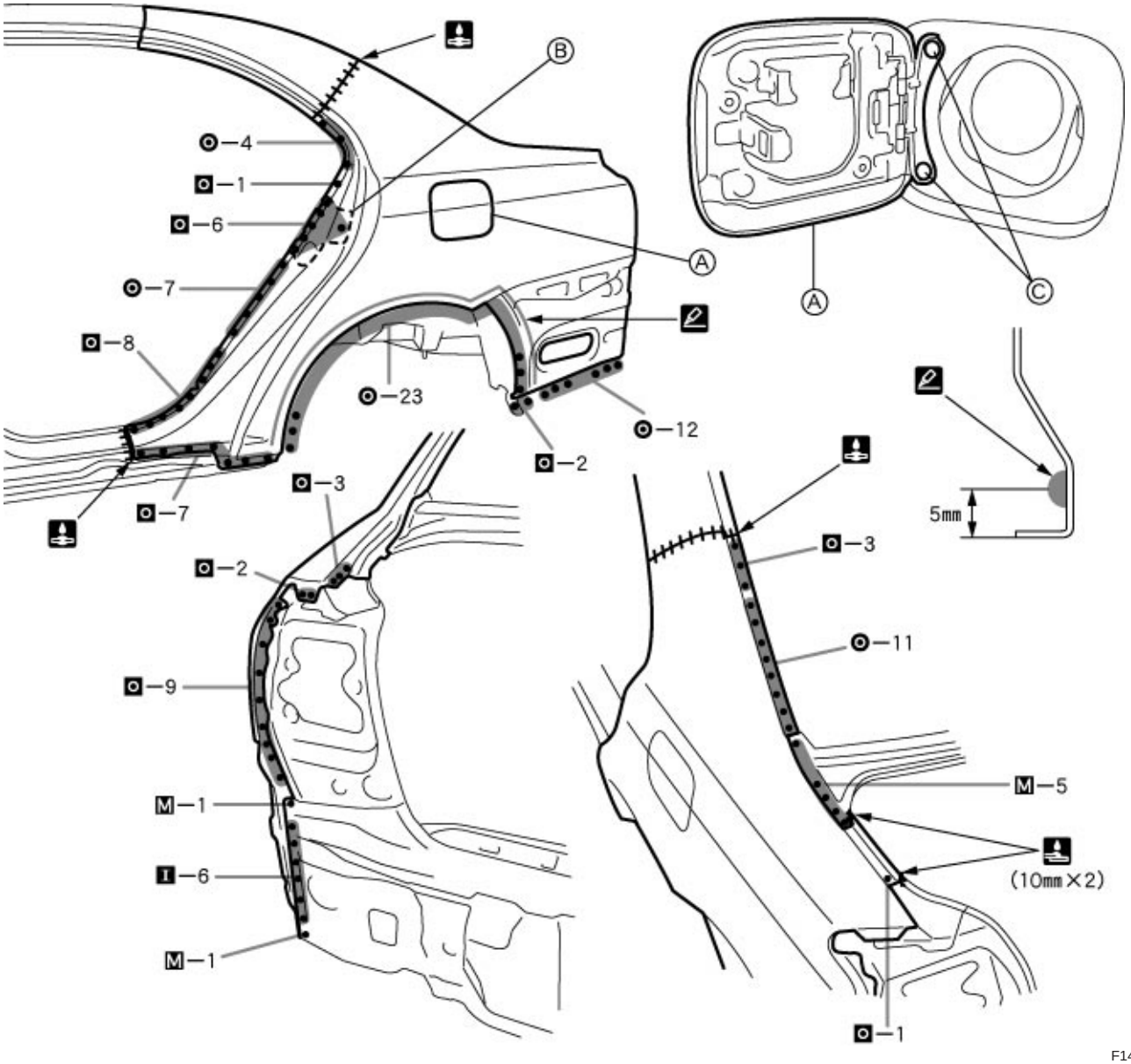

POINT

1 Before temporarily installing the new parts, apply body sealer to the wheel arch.
HINT:
1) Apply body sealer about 5mm (0.20in.) from the flange, avoiding any oozing.
2) Apply sealer evenly, about 3 – 4mm (0.12 – 0.16in.) in diameter.

2 Use waterproof rivets for the Ⓐ installation.
HINT:
1) Apply the body sealer before installing the Ⓐ .

PART NAME

Ⓐ Fuel Filler Opening Lid Ⓑ Quarter Lock Pillar Ⓒ Waterproof Rivets

10mm (0.39in.)

QUARTER PANEL (CUT): Liftback



F14603-A

REMOVAL

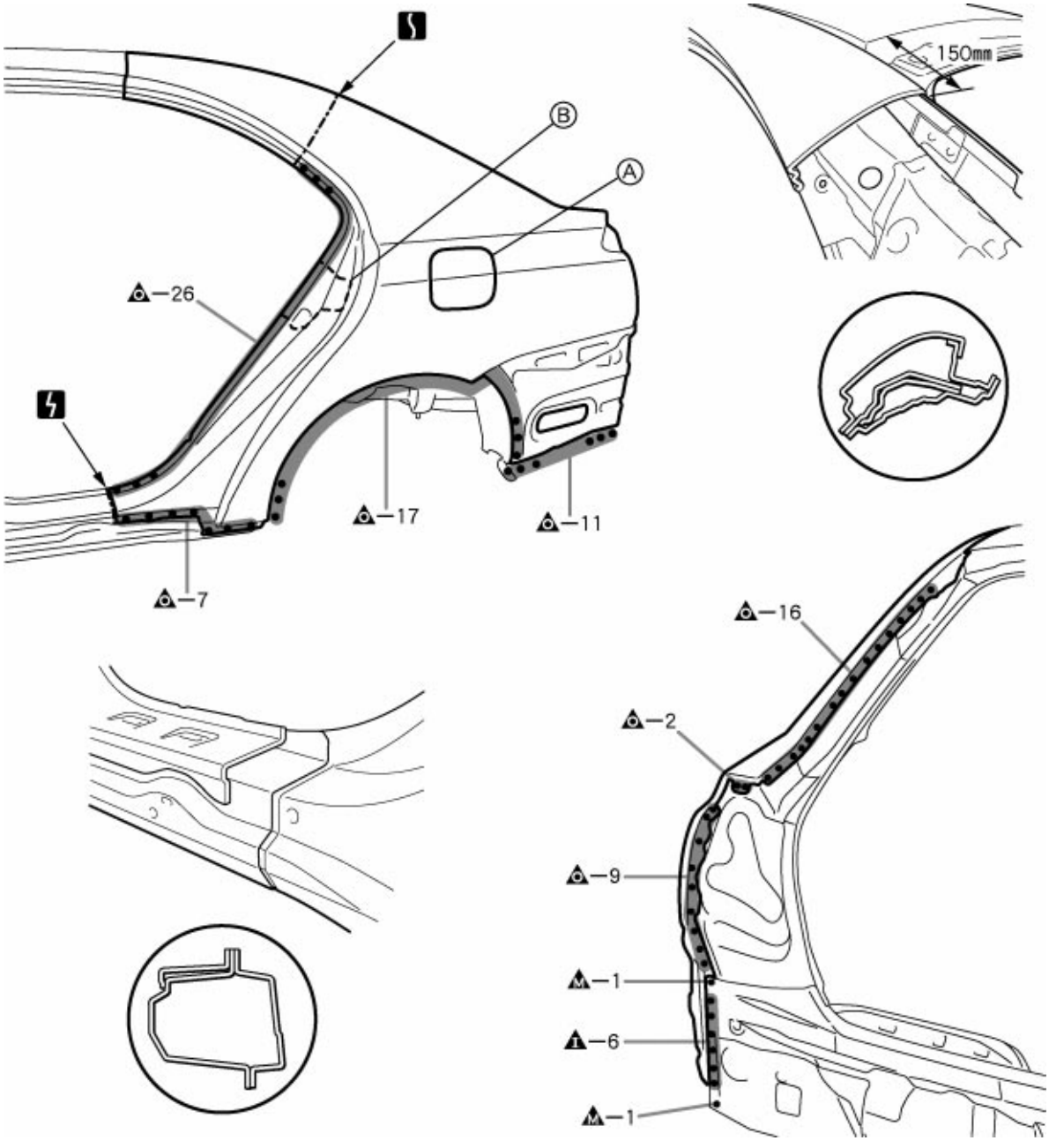

F14603

POINT

1 Remove the Ⓑ at the same time.

PART NAME

Ⓐ Fuel Filler Opening Lid Ⓑ Quarter Lock Pillar

150mm (5.91in.)

INSTALLATION

- Temporarily install the new parts and measure each part of the new parts in accordance with the body dimension diagram. (See the body dimension diagram)
- Inspect the fitting of the related parts around the new parts before welding. This affects the appearance of the finish.
- After welding, apply the polyurethane foam to the corresponding parts.
- After welding, apply body sealer and under-coating to the corresponding parts.
- After applying the top coat layer, apply anti-rust agent to the inside of the necked section structural weld spots.

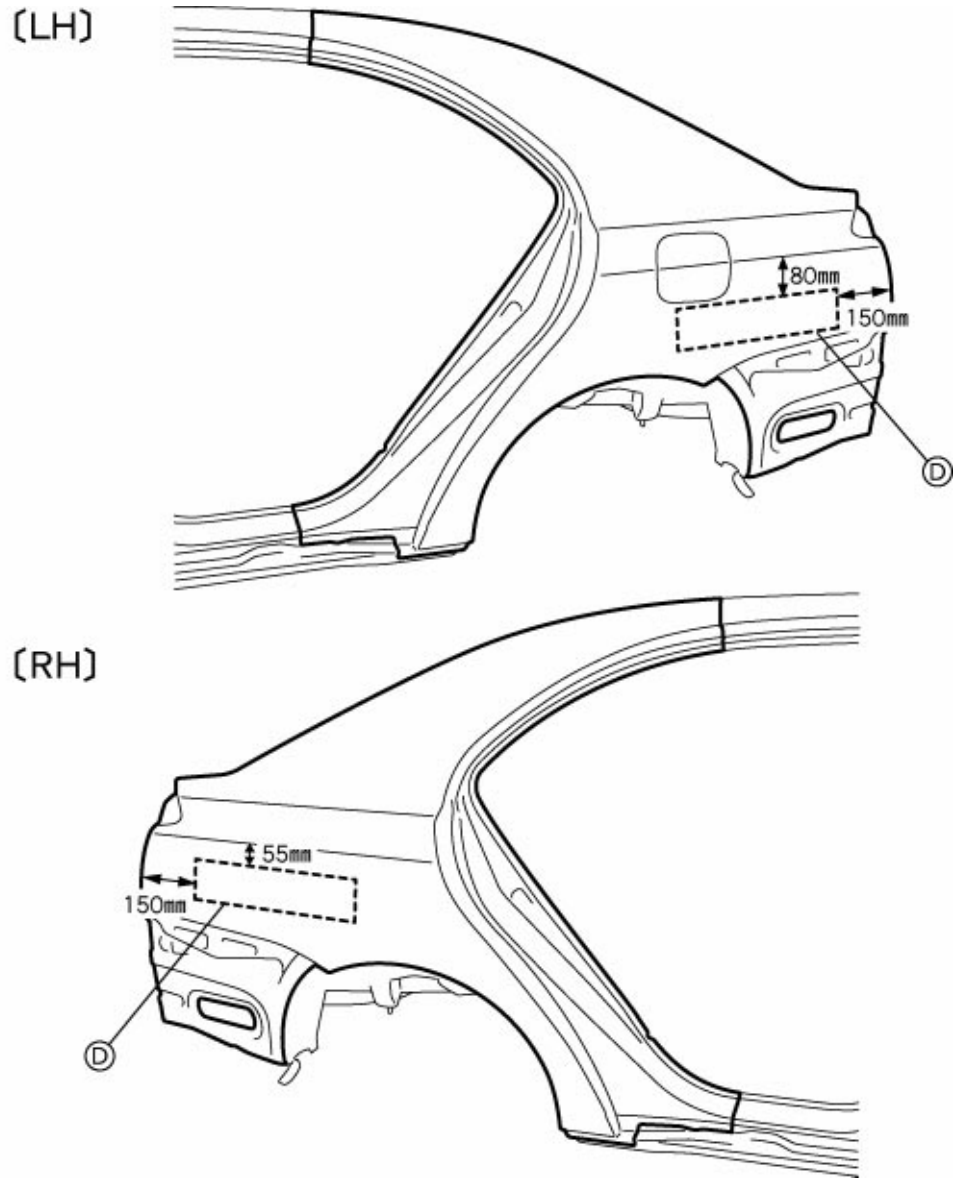

F14625

POINT

1 Before initial spot welding the new parts, attach the quarter panel silencer sheet to the inside of the quarter panel, at the position indicated on the diagram above.
HINT:
1) Use the quarter panel silencer sheet (Part No. 67813-44010).

PART NAME

Ⓐ Quarter Panel Silencer Sheet

55mm (2.17in.) 80mm (3.15in.) 150mm (5.91in.)

INSTALLATION

- Temporarily install the new parts and measure each part of the new parts in accordance with the body dimension diagram. (See the body dimension diagram)
- Inspect the fitting of the related parts around the new parts before welding. This affects the appearance of the finish.
- After welding, apply the polyurethane foam to the corresponding parts.
- After welding, apply body sealer and under-coating to the corresponding parts.
- After applying the top coat layer, apply anti-rust agent to the inside of the necked section structural weld spots.

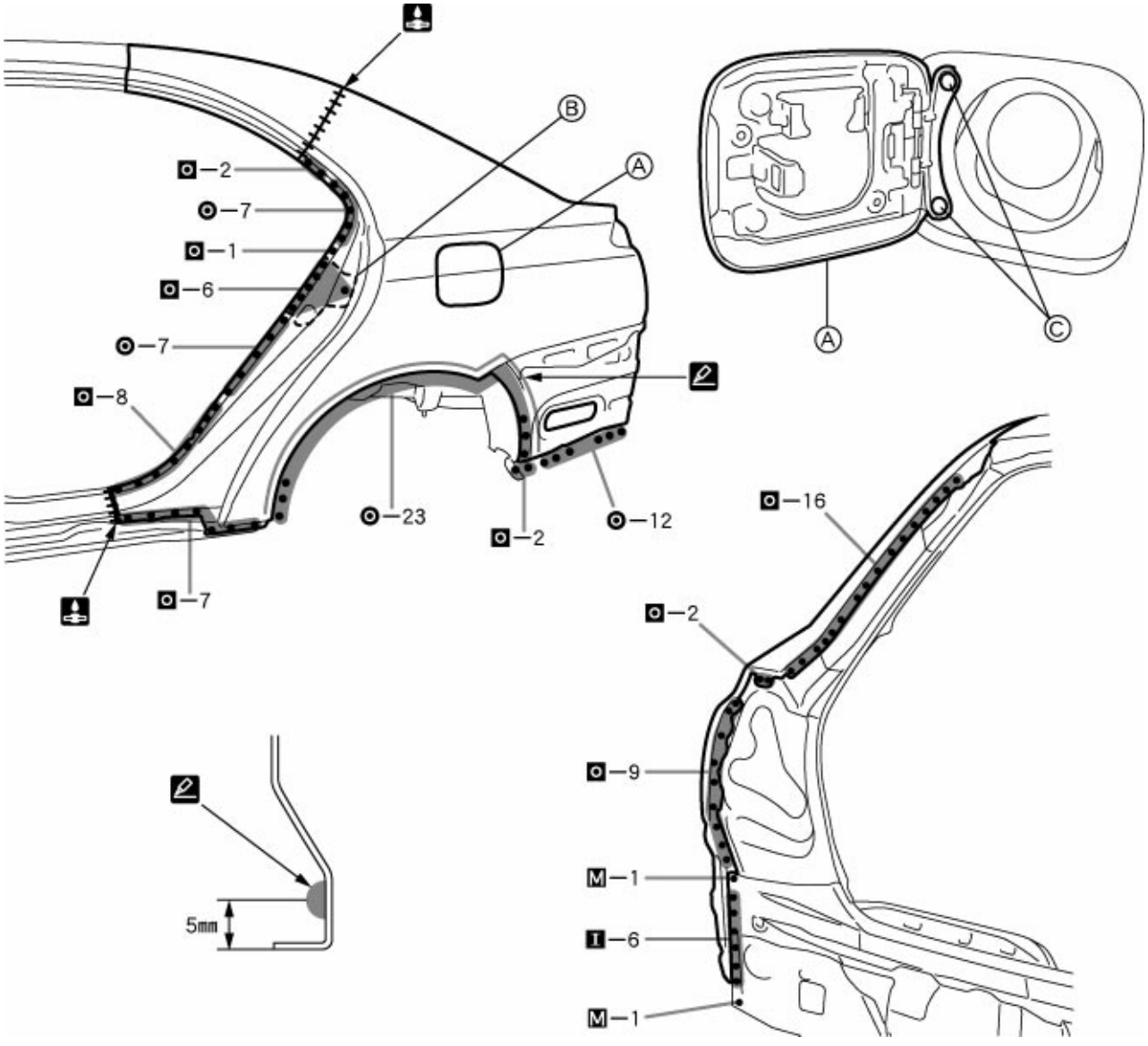

F14604

POINT

1 Before temporarily installing the new parts, apply body sealer to the wheel arch.
HINT:
1) Apply body sealer about 5mm (0.20in.) from the flange, avoiding any oozing.
2) Apply sealer evenly, about 3 – 4mm (0.12 – 0.16in.) in diameter.

2 Use waterproof rivets for the Ⓐ installation.
HINT:
1) Apply the body sealer before installing the Ⓐ.

PART NAME

Ⓐ Fuel Filler Opening Lid Ⓑ Quarter Lock Pillar Ⓒ Waterproof Rivets

QUARTER PANEL (CUT): Wagon

REMOVAL



F14605-A

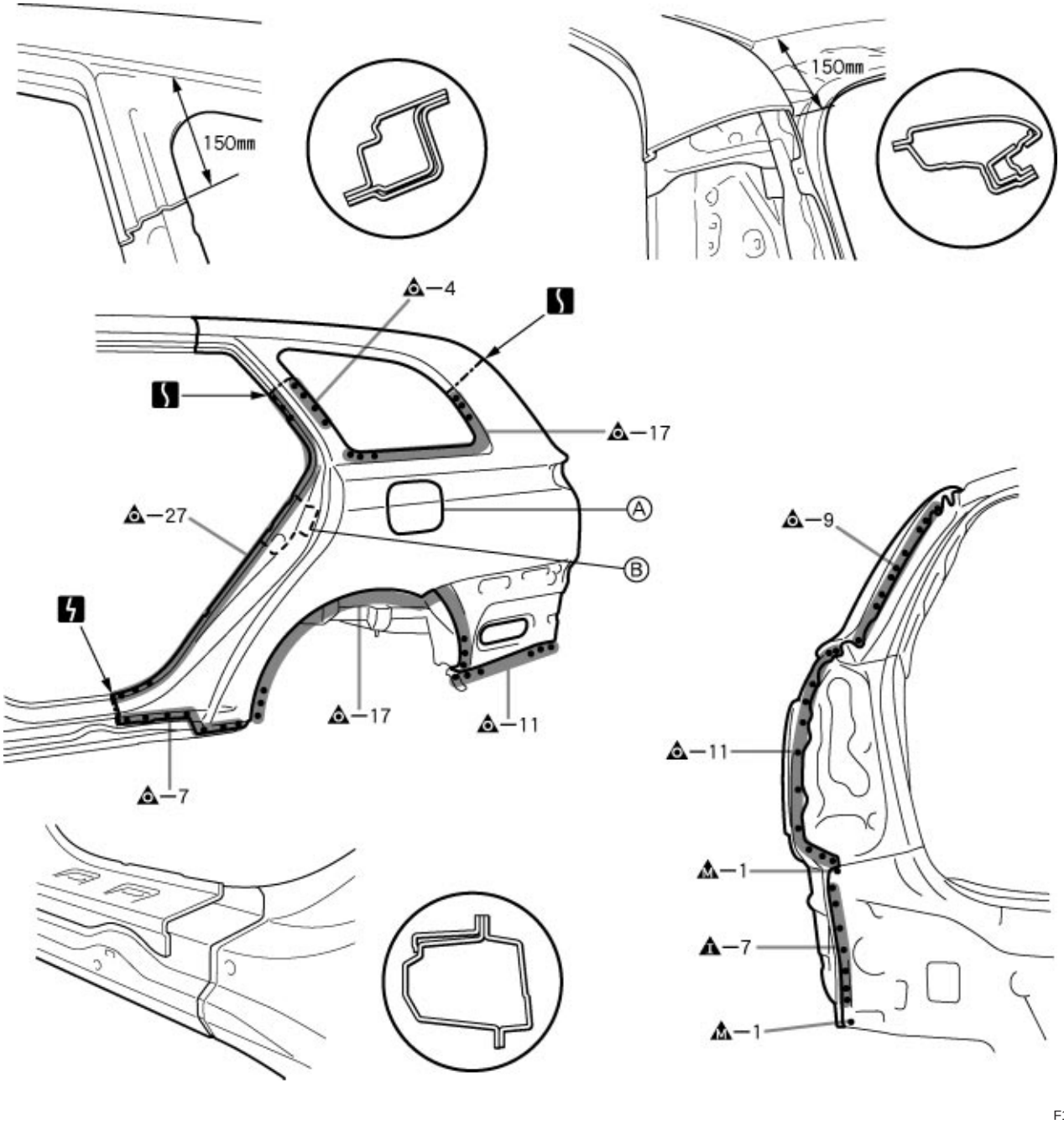

F14605

POINT

1 Remove the Ⓑ at the same time.

PART NAME

Ⓐ Fuel Filler Opening Lid Ⓑ Quarter Lock Pillar

150mm (5.91in.)

INSTALLATION

- Temporarily install the new parts and measure each part of the new parts in accordance with the body dimension diagram. (See the body dimension diagram)
- Inspect the fitting of the related parts around the new parts before welding. This affects the appearance of the finish.
- After welding, apply the polyurethane foam to the corresponding parts.
- After welding, apply body sealer and under-coating to the corresponding parts.
- After applying the top coat layer, apply anti-rust agent to the inside of the necked section structural weld spots.

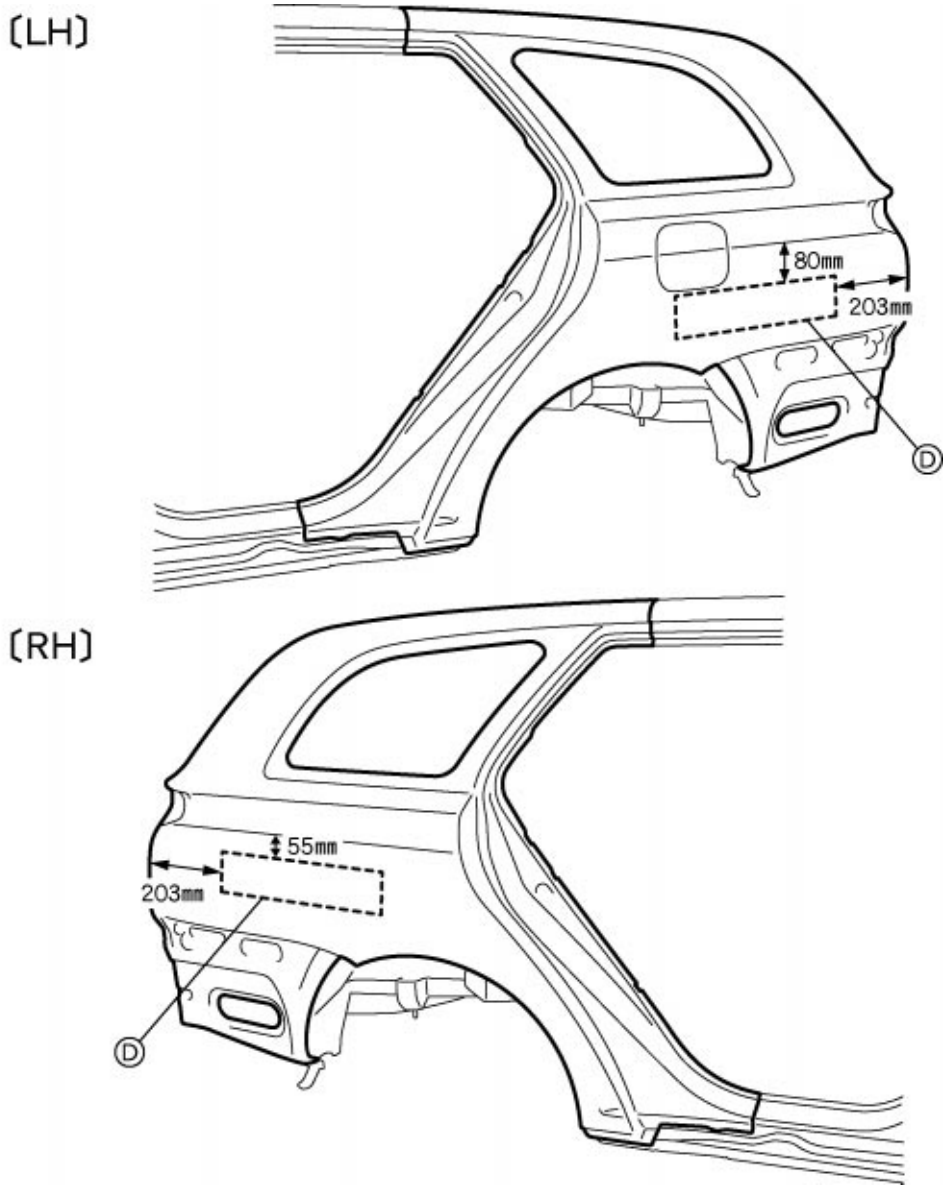

F14626

POINT

1 Before initial spot welding the new parts, attach the quarter panel silencer sheet to the inside of the quarter panel, at the position indicated on the diagram above.
HINT:
1) Use the quarter panel silencer sheet (Part No. 67813-44010).

PART NAME

Ⓐ Quarter Panel Silencer Sheet

55mm (2.17in.) 80mm (3.15in.) 150mm (5.91in.)

INSTALLATION

- Temporarily install the new parts and measure each part of the new parts in accordance with the body dimension diagram. (See the body dimension diagram)
- Inspect the fitting of the related parts around the new parts before welding. This affects the appearance of the finish.
- After welding, apply the polyurethane foam to the corresponding parts.
- After welding, apply body sealer and under-coating to the corresponding parts.
- After applying the top coat layer, apply anti-rust agent to the inside of the necked section structural weld spots.

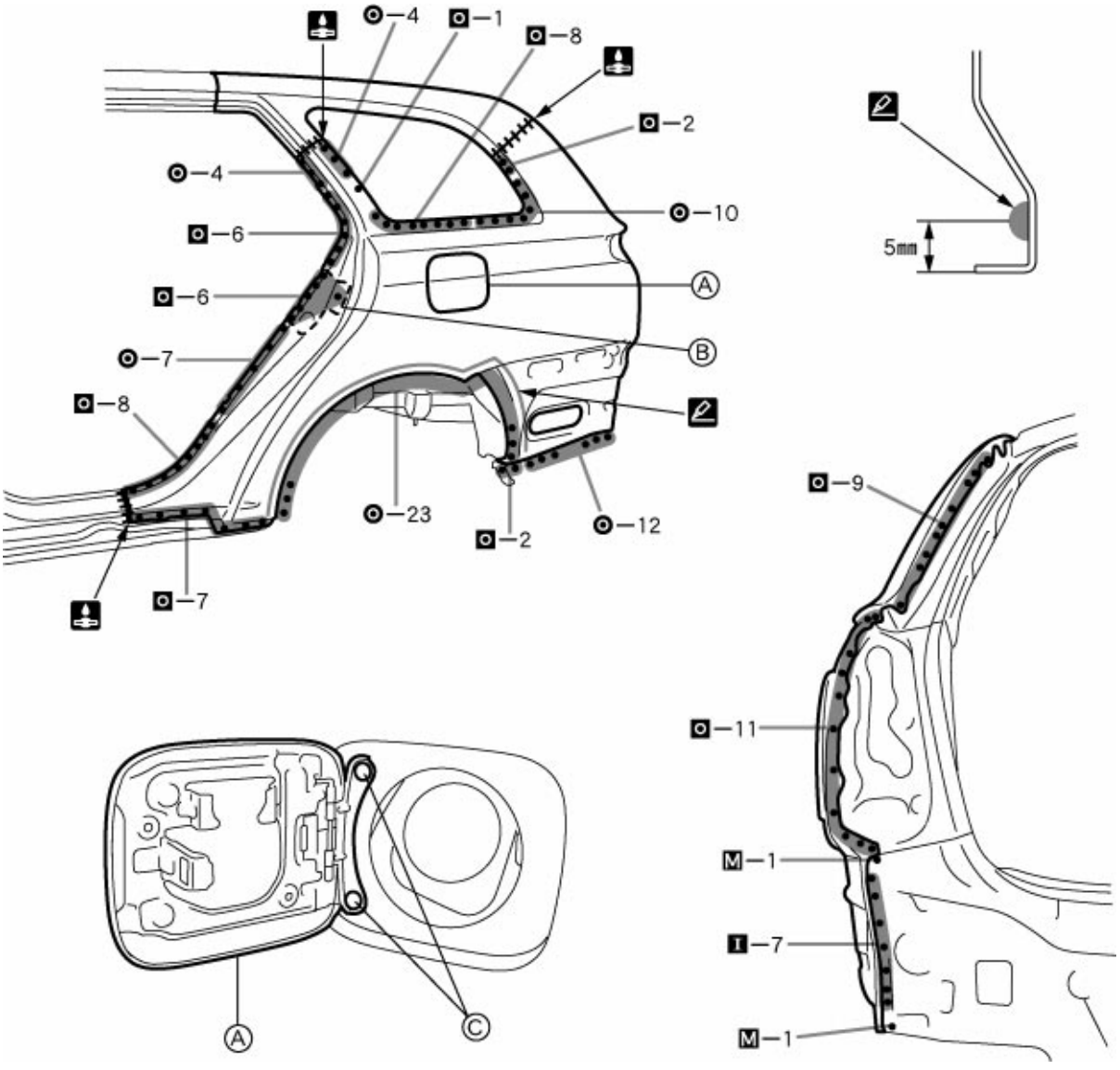

F14606

POINT

1 Before temporarily installing the new parts, apply body sealer to the wheel arch.
HINT:
1) Apply body sealer about 5mm (0.20in.) from the flange, avoiding any oozing.
2) Apply sealer evenly, about 3 – 4mm (0.12 – 0.16in.) in diameter.

2 Use waterproof rivets for the Ⓐ installation.
HINT:
1) Apply the body sealer before installing the Ⓐ .

PART NAME

Ⓐ Fuel Filler Opening Lid Ⓑ Quarter Lock Pillar Ⓒ Waterproof Rivets

QUARTER WHEEL HOUSING OUTER PANEL (ASSY): Sedan



F14607-A

REMOVAL
With the quarter panel, No.1 lower outer rail removed.

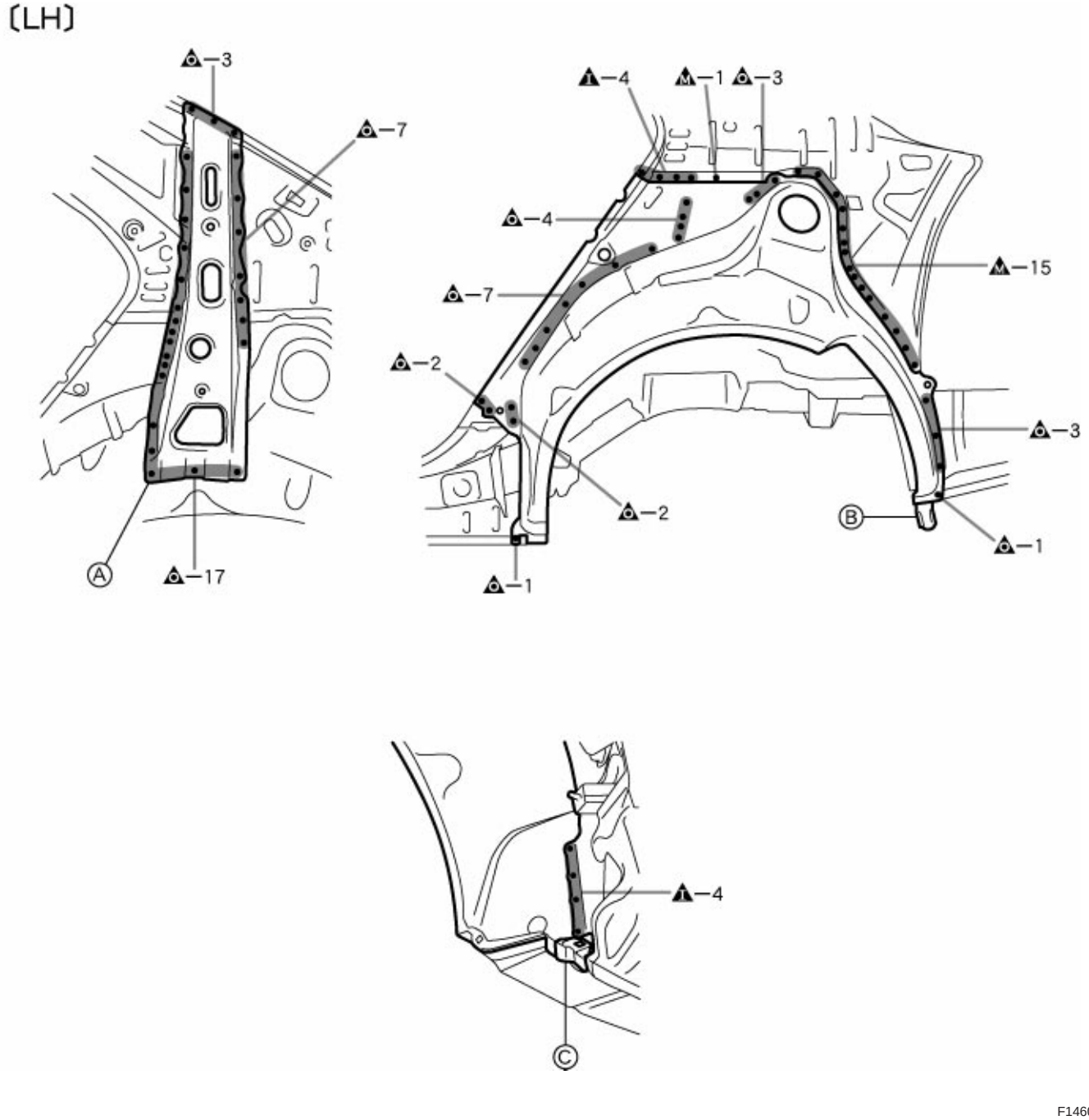

F14607

POINT
1 After removing the Ⓐ, remove the quarter wheel housing outer panel.

PART NAME
Ⓐ Roof Side Outer Panel Ⓑ Rear Bumper Side Bracket Ⓒ Rear Wheel Opening No.1 Bracket

〔RH〕

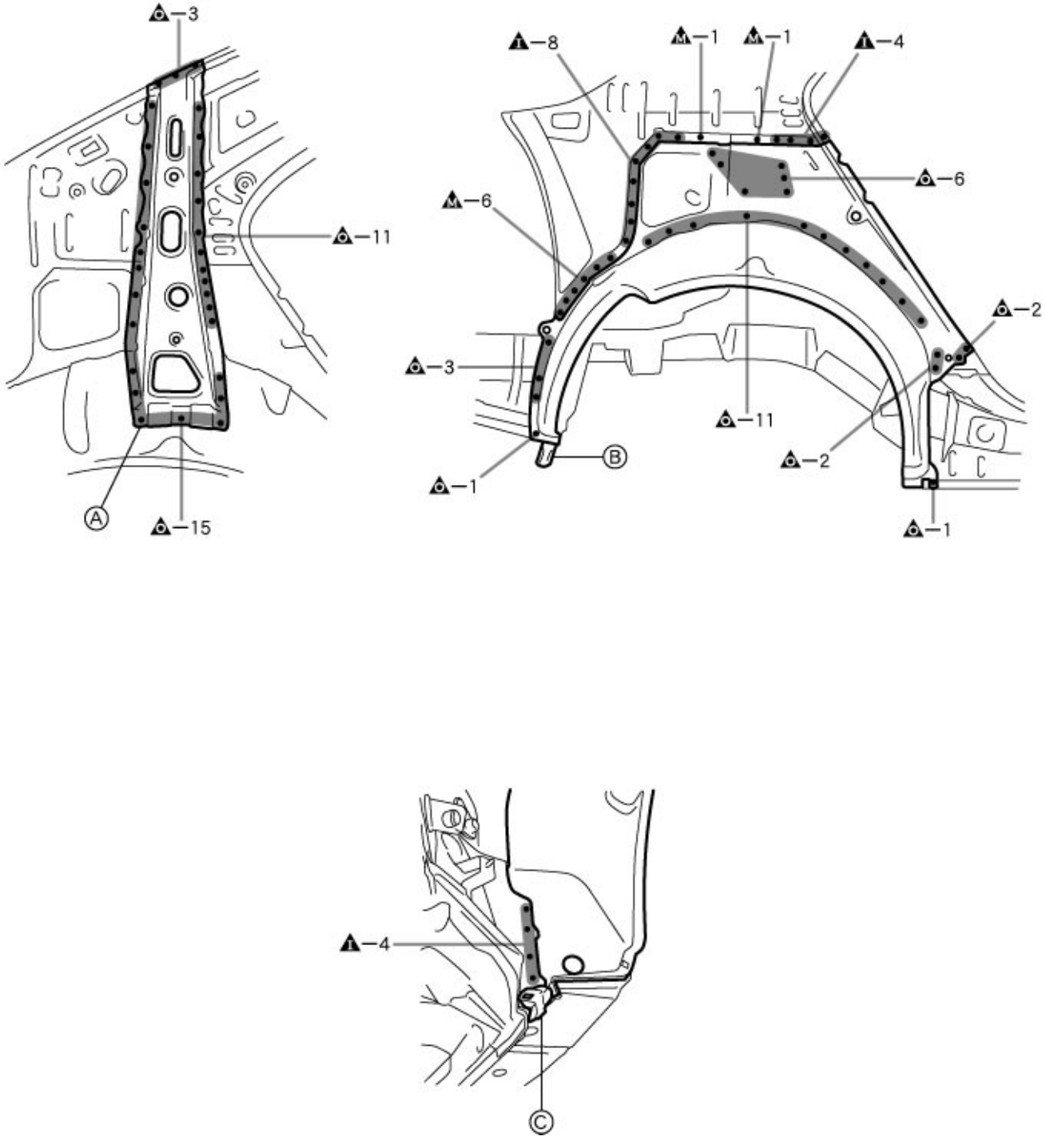

F14608

PART NAME

Ⓐ Roof Side Outer Panel Ⓑ Rear Bumper Side Bracket Ⓒ Rear Wheel Opening No.1 Bracket

INSTALLATION

- Temporarily install the new parts and measure each part of the new parts in accordance with the body dimension diagram. (See the body dimension diagram)
- Inspect the fitting of the related parts around the new parts before welding. This affects the appearance of the finish.
- After welding, apply the polyurethane foam to the corresponding parts.
- After welding, apply body sealer and under-coating to the corresponding parts.
- After applying the top coat layer, apply anti-rust agent to the inside of the necked section structural weld spots.

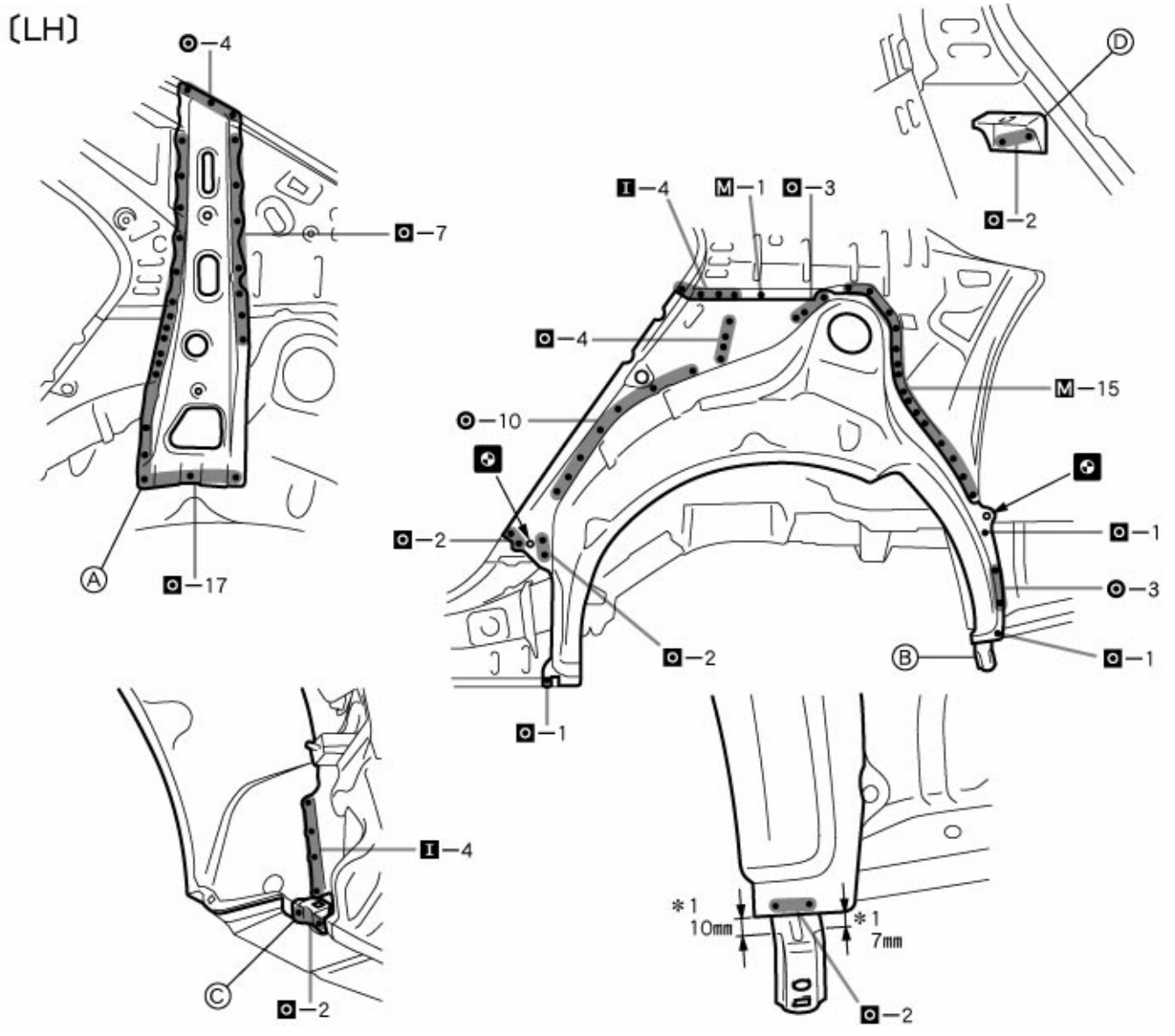

POINT

1 Determine the position of the new parts by assembly marks of the inner and outer panels.
2 *1: The value is reference value.

PART NAME

Ⓐ Roof Side Outer Panel Ⓑ Rear Bumper Side Bracket Ⓒ Rear Wheel Opening No.1 Bracket
Ⓓ Rear Seat Back Stopper Bracket

7mm (0.28in.) 10mm (0.39in.)

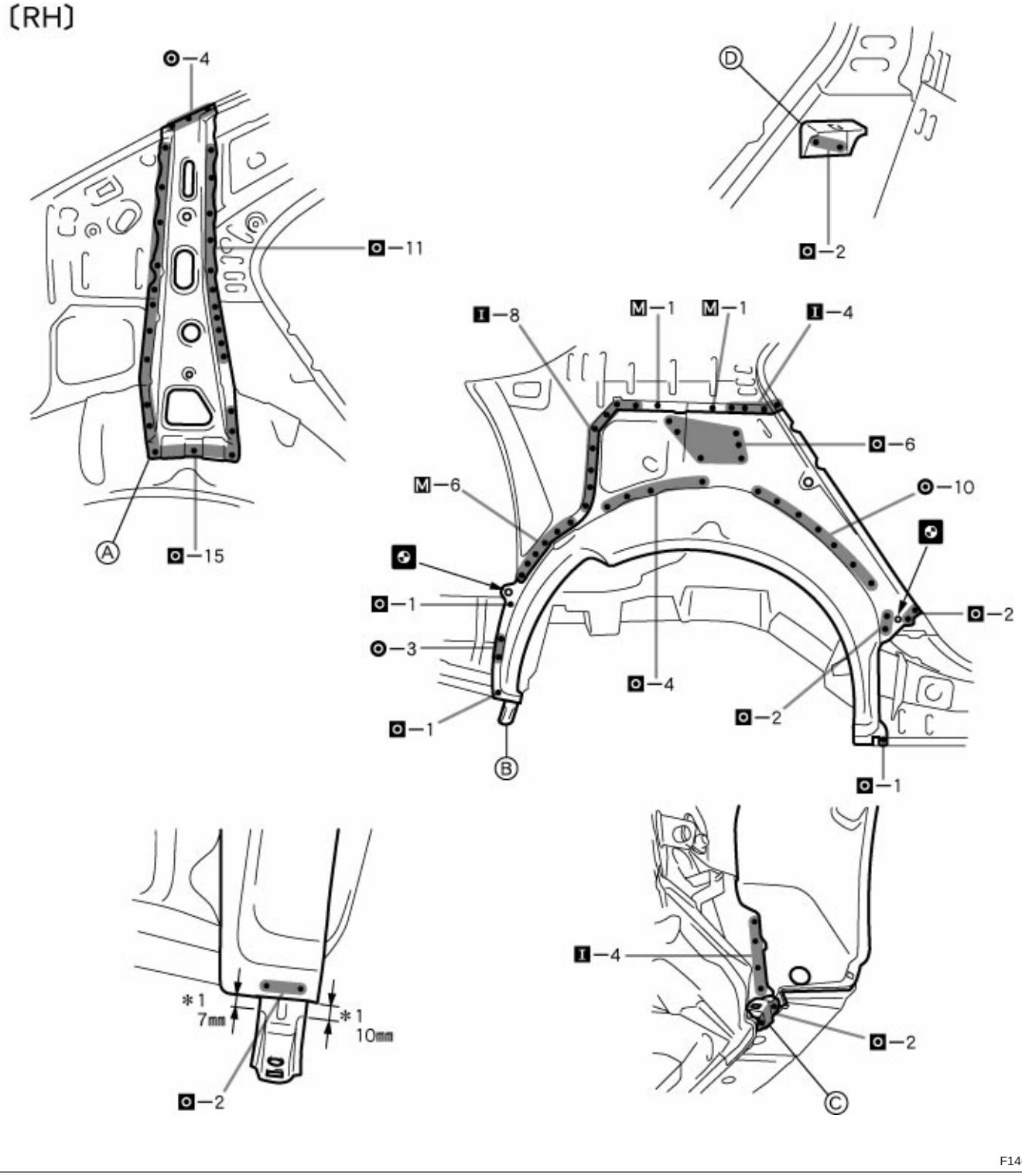

POINT

1 Determine the position of the new parts by assembly marks of the inner and outer panels.

2 *1: The value is reference value.

PART NAME

Ⓐ Roof Side Outer Panel Ⓑ Rear Bumper Side Bracket Ⓒ Rear Wheel Opening No.1 Bracket

Ⓓ Rear Seat Back Stopper Bracket

7mm (0.28in.) 10mm (0.39in.)

QUARTER WHEEL HOUSING OUTER PANEL (ASSY): Liftback



F14611-A

REMOVAL
With the quarter panel, No.1 lower outer rail removed.

〔LH〕

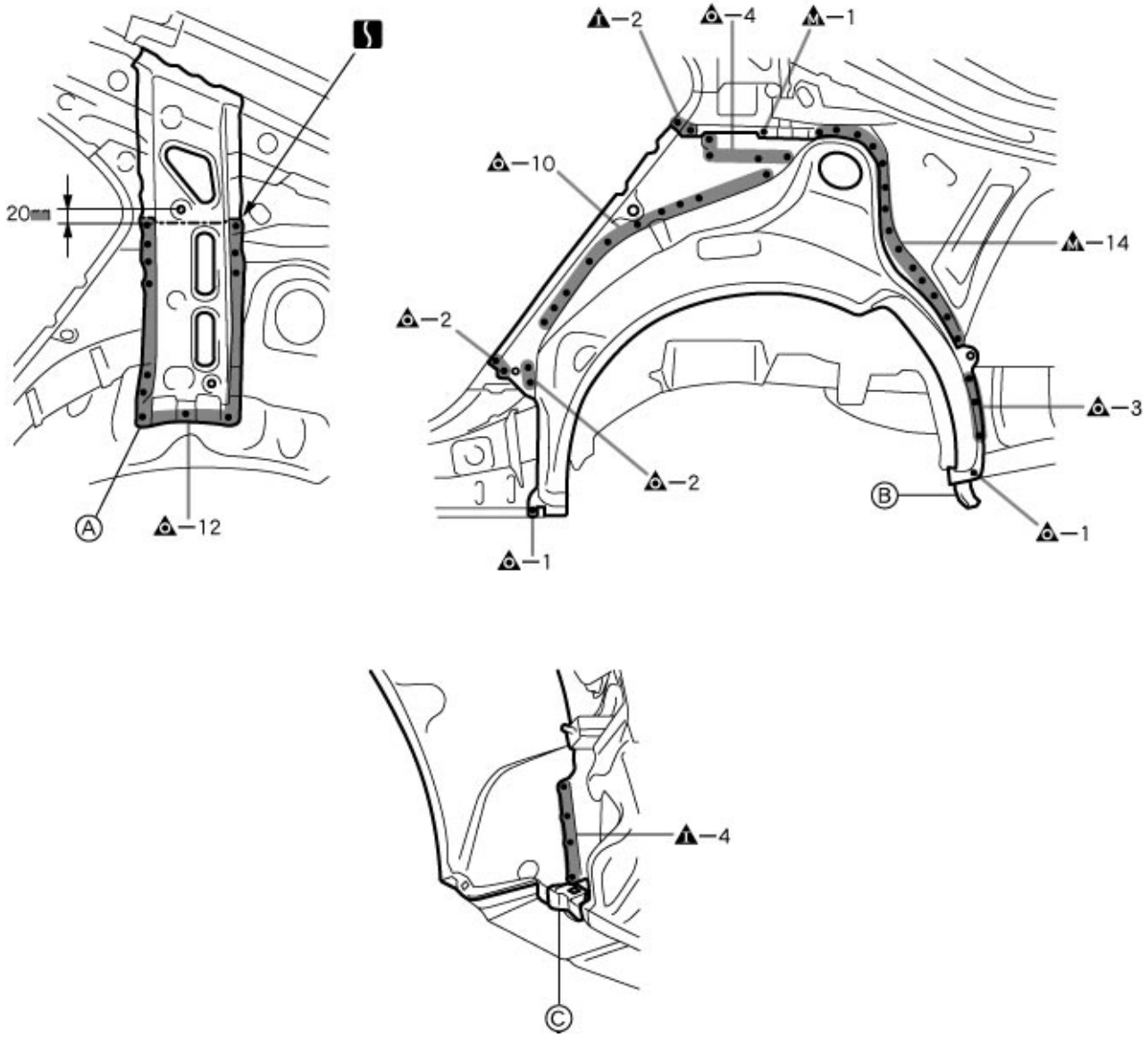

F14611

POINT
1 After removing the Ⓐ, remove the quarter wheel housing outer panel.

PART NAME
Ⓐ Roof Side Outer Panel Ⓑ Rear Bumper Side Bracket Ⓒ Rear Wheel Opening No.1 Bracket
20mm (0.79in.)

(RH)

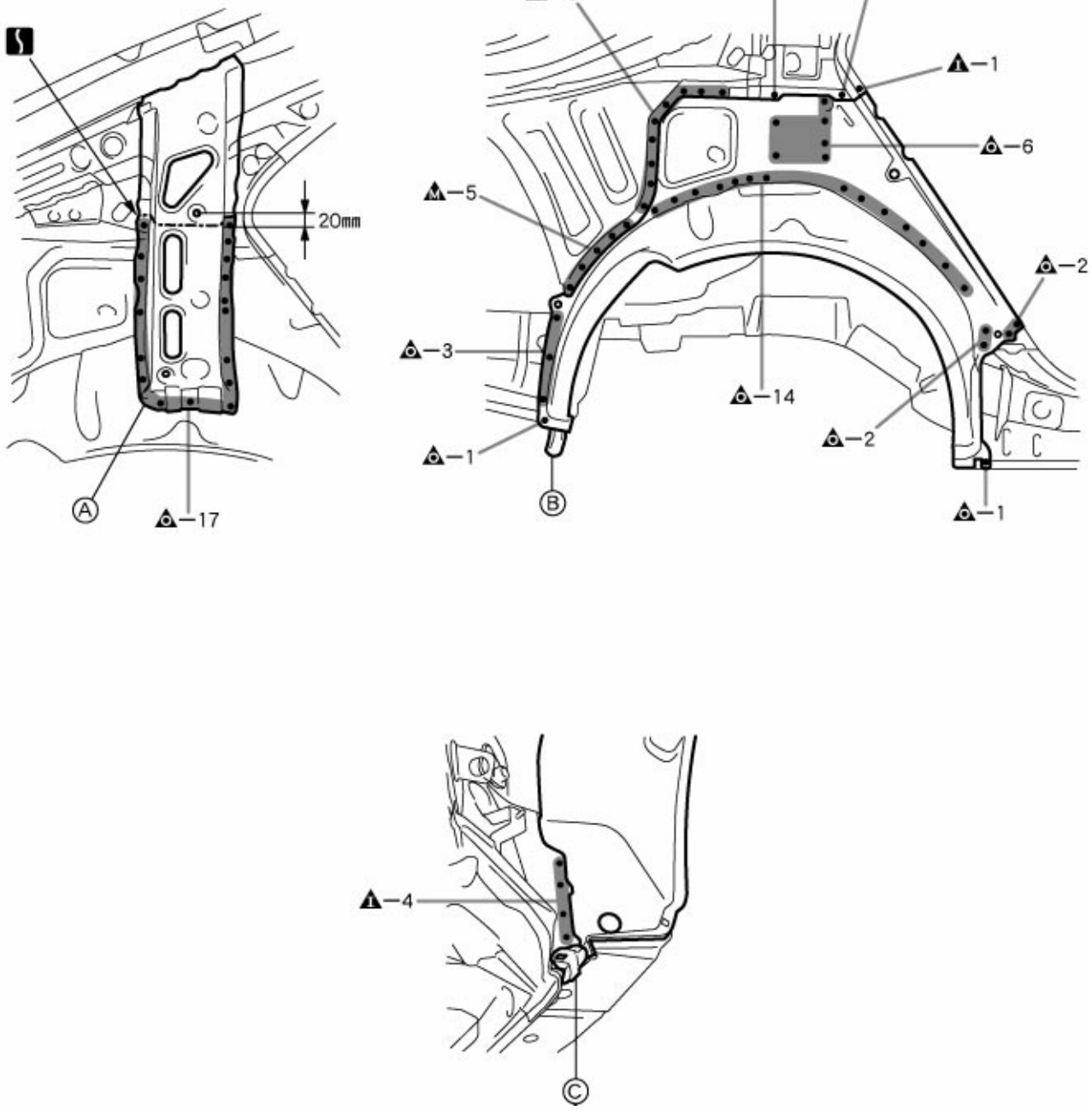

F14612

PART NAME

Ⓐ Roof Side Outer Panel Ⓑ Rear Bumper Side Bracket Ⓒ Rear Wheel Opening No.1 Bracket

20mm (0.79in.)

INSTALLATION

- Temporarily install the new parts and measure each part of the new parts in accordance with the body dimension diagram. (See the body dimension diagram)
- Inspect the fitting of the related parts around the new parts before welding. This affects the appearance of the finish.
- After welding, apply the polyurethane foam to the corresponding parts.
- After welding, apply body sealer and under-coating to the corresponding parts.
- After applying the top coat layer, apply anti-rust agent to the inside of the necked section structural weld spots.

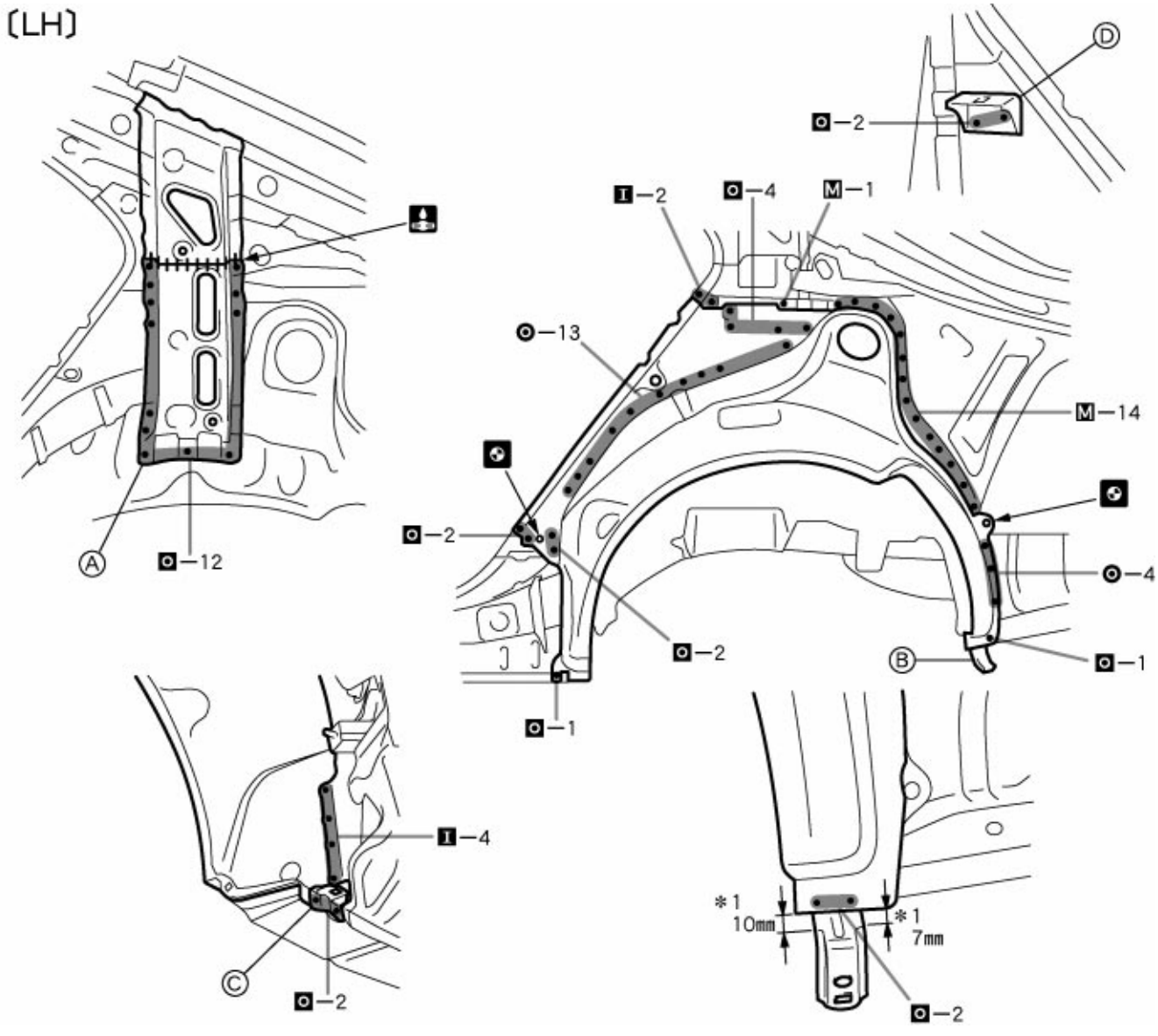

POINT

1 Determine the position of the new parts by assembly marks of the inner and outer panels.
2 *1: The value is reference value.

PART NAME

Ⓐ Roof Side Outer Panel Ⓑ Rear Bumper Side Bracket Ⓒ Rear Wheel Opening No.1 Bracket
Ⓓ Rear Seat Back Stopper Bracket

7mm (0.28in.) 10mm (0.39in.)

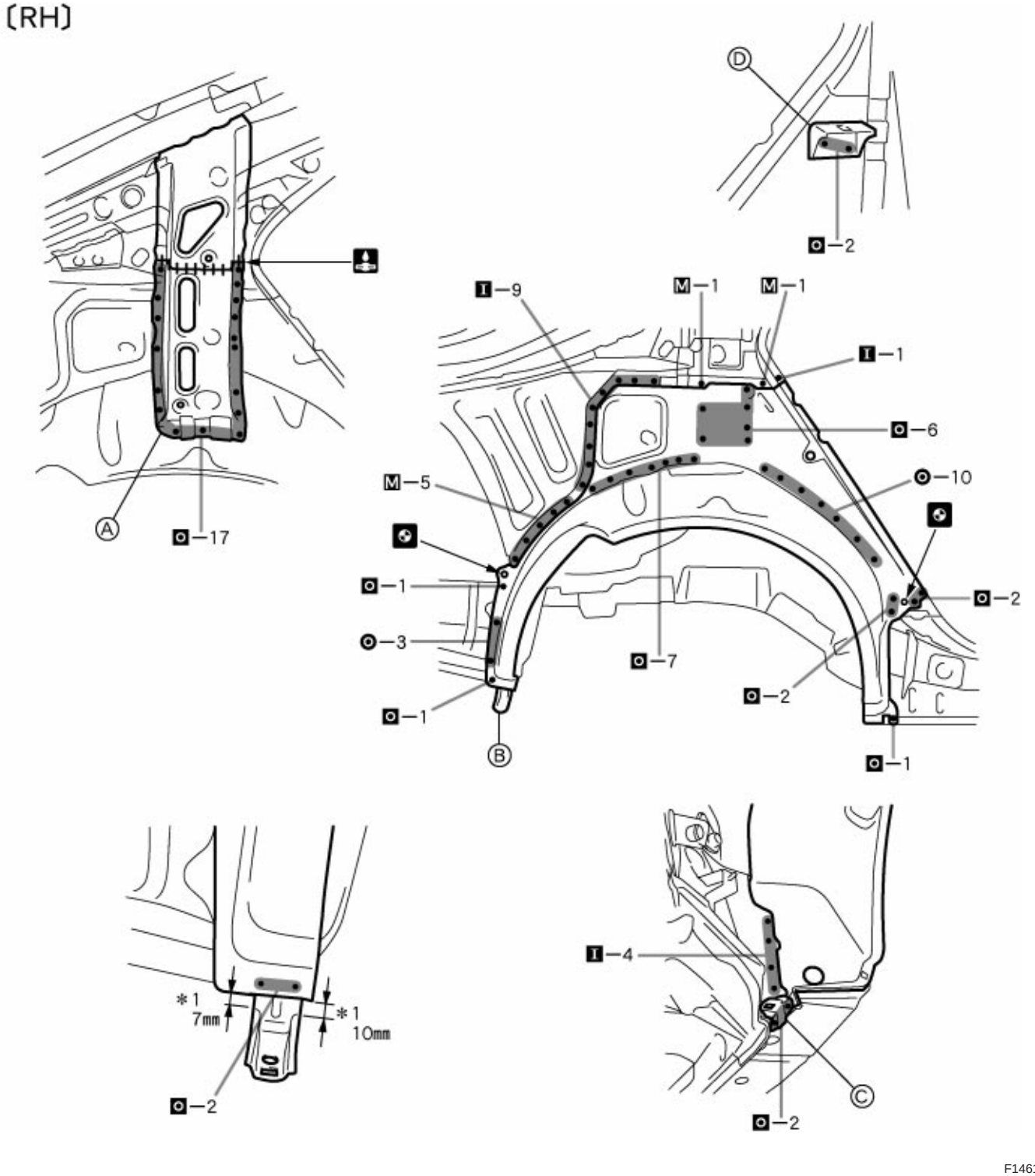

POINT

1 Determine the position of the new parts by assembly marks of the inner and outer panels.

2 *1: The value is reference value.

PART NAME

Ⓐ Roof Side Outer Panel Ⓑ Rear Bumper Side Bracket Ⓒ Rear Wheel Opening No.1 Bracket
Ⓓ Rear Seat Back Stopper Bracket

7mm (0.28in.) 10mm (0.39in.)

QUARTER WHEEL HOUSING OUTER PANEL (ASSY): Wagon



F14615-A

REMOVAL
With the quarter panel, No.1 lower outer rail removed.

(LH)

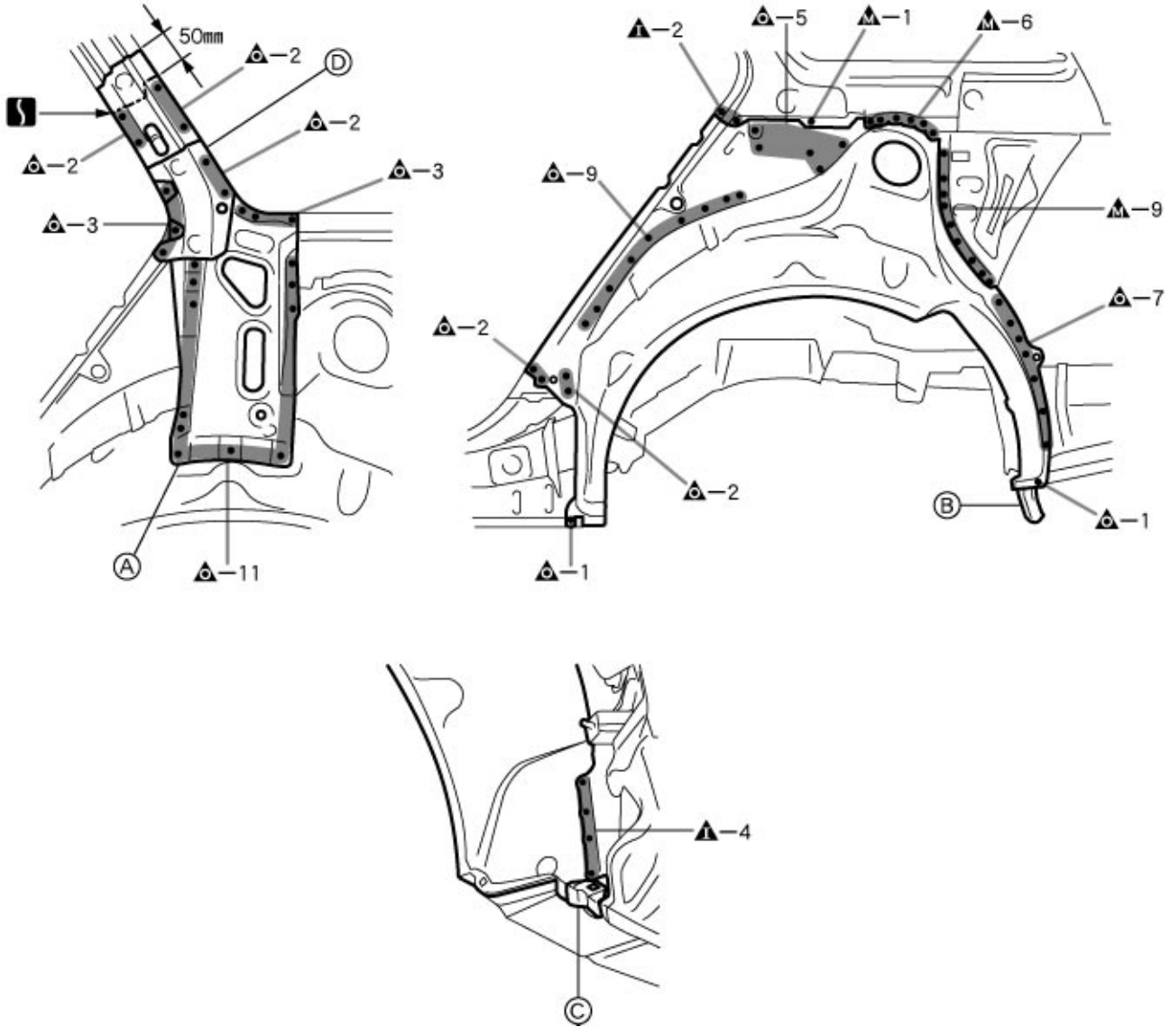

F14615

POINT
1 After removing the Ⓐ and Ⓓ, remove the quarter wheel housing outer panel.

PART NAME
Ⓐ Roof Side Outer Panel Ⓑ Rear Bumper Side Bracket Ⓒ Rear Wheel Opening No.1 Bracket
Ⓓ Roof Side Inner Front Extension

50mm (1.97in.)

〔RH〕

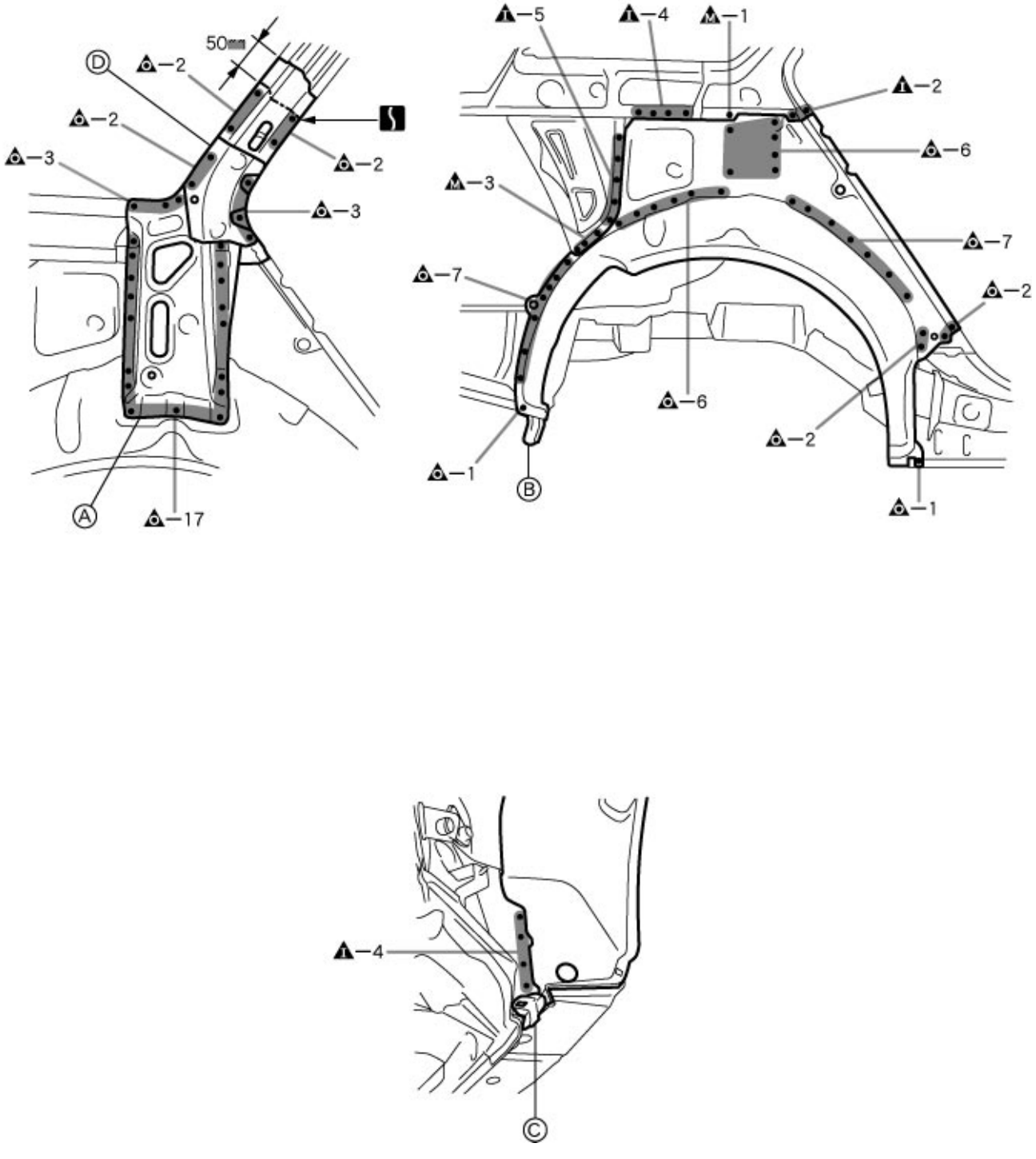

F14616

PART NAME

Ⓐ Roof Side Outer Panel Ⓑ Rear Bumper Side Bracket Ⓒ Rear Wheel Opening No.1 Bracket
Ⓓ Roof Side Inner Front Extension

50mm (1.97in.)

INSTALLATION

- Temporarily install the new parts and measure each part of the new parts in accordance with the body dimension diagram. (See the body dimension diagram)
- Inspect the fitting of the related parts around the new parts before welding. This affects the appearance of the finish.
- After welding, apply the polyurethane foam to the corresponding parts.
- After welding, apply body sealer and under-coating to the corresponding parts.
- After applying the top coat layer, apply anti-rust agent to the inside of the necked section structural weld spots.

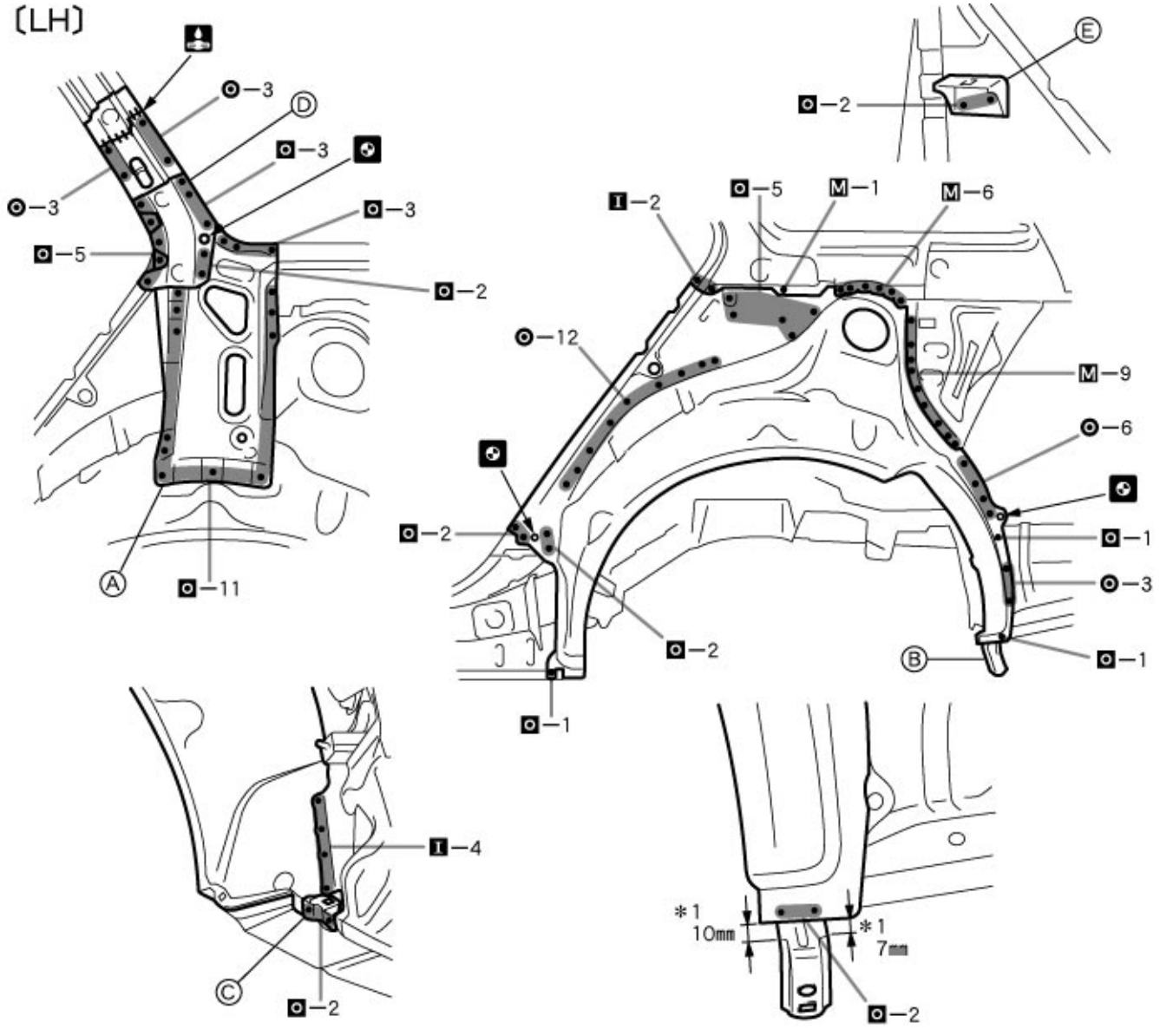

POINT

1 Determine the position of the new parts by assembly marks of the inner and outer panels.
2 *1: The value is reference value.

PART NAME

Ⓐ Roof Side Outer Panel Ⓑ Rear Bumper Side Bracket Ⓒ Rear Wheel Opening No.1 Bracket
Ⓓ Roof Side Inner Front Extension Ⓔ Rear Seat Back Stopper Bracket

7mm (0.28in.) 10mm (0.39in.)

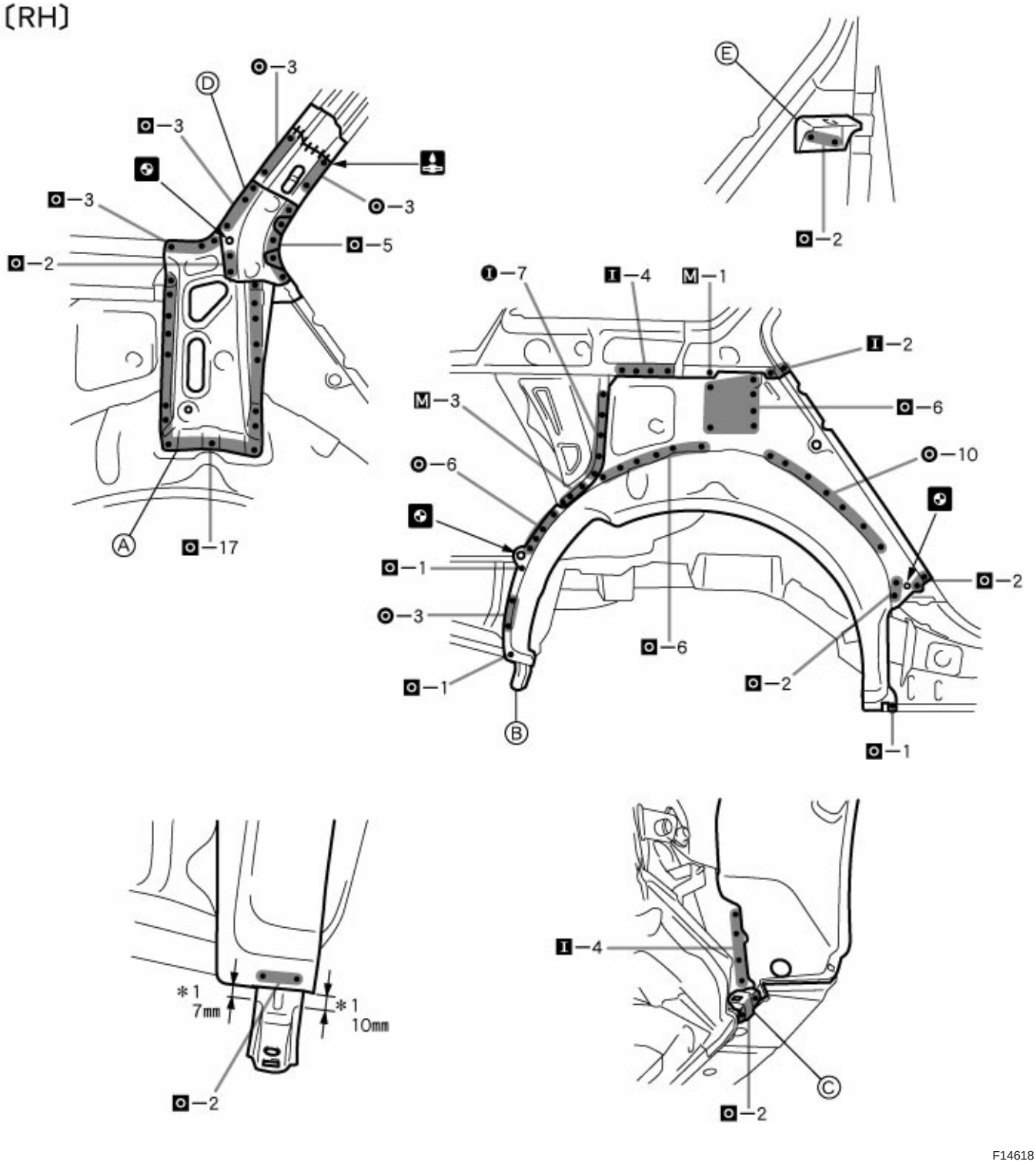

POINT

1 Determine the position of the new parts by assembly marks of the inner and outer panels.
2 *1: The value is reference value.

PART NAME

Ⓐ Roof Side Outer Panel Ⓑ Rear Bumper Side Bracket Ⓒ Rear Wheel Opening No.1 Bracket
Ⓓ Roof Side Inner Front Extension Ⓔ Rear Seat Back Stopper Bracket

7mm (0.28in.) 10mm (0.39in.)

BODY LOWER BACK PANEL (ASSY): Sedan, Liftback



F14420-A

REMOVAL

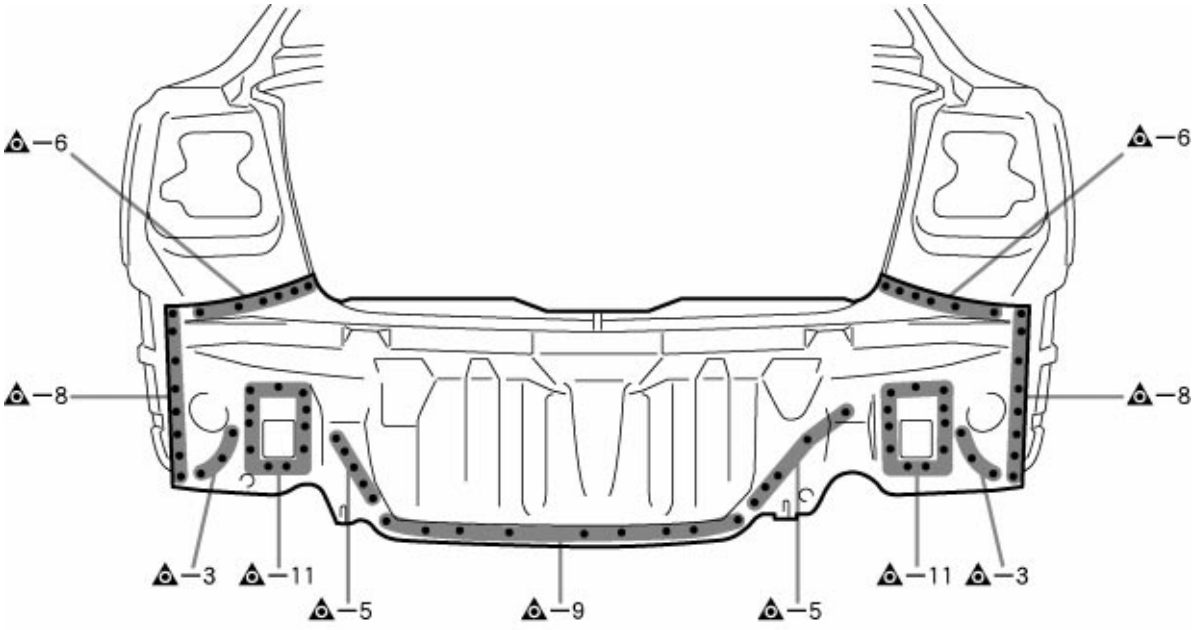

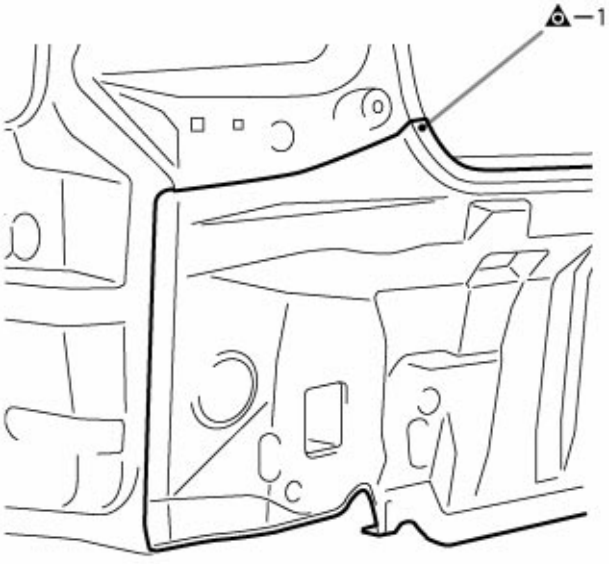

F14420

INSTALLATION

- Temporarily install the new parts and measure each part of the new parts in accordance with the body dimension diagram. (See the body dimension diagram)
- Inspect the fitting of the related parts around the new parts before welding. This affects the appearance of the finish.
- After welding, apply the polyurethane foam to the corresponding parts.
- After welding, apply body sealer and under-coating to the corresponding parts.
- After applying the top coat layer, apply anti-rust agent to the inside of the necked section structural weld spots.

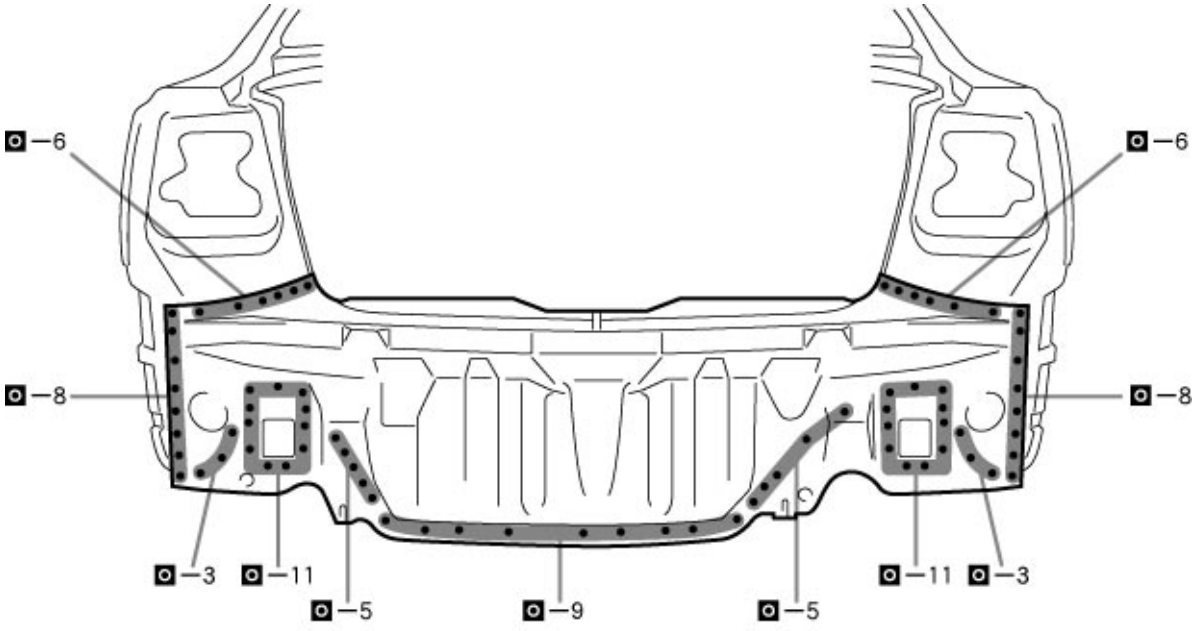

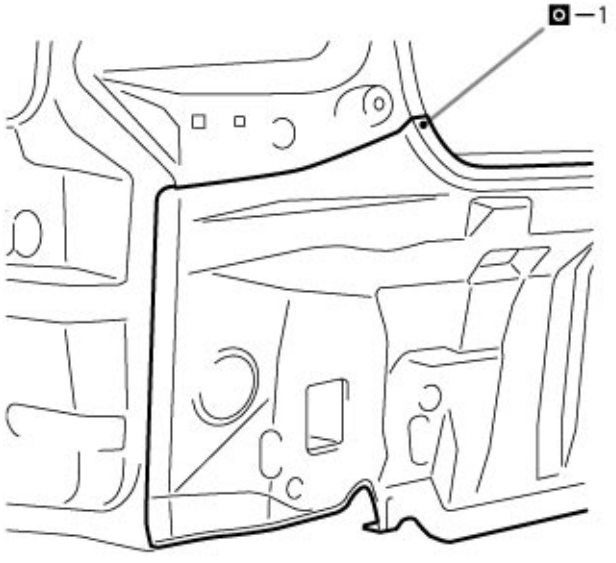

F14421

BODY LOWER BACK PANEL (ASSY): Wagon



F14422-A

REMOVAL

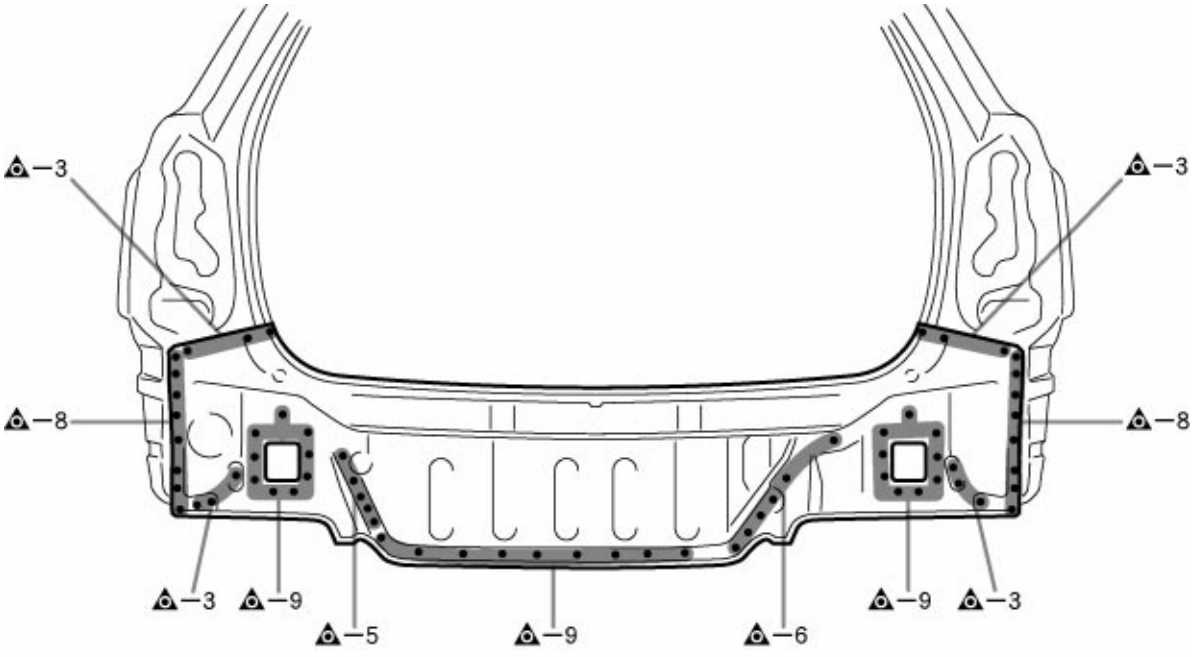

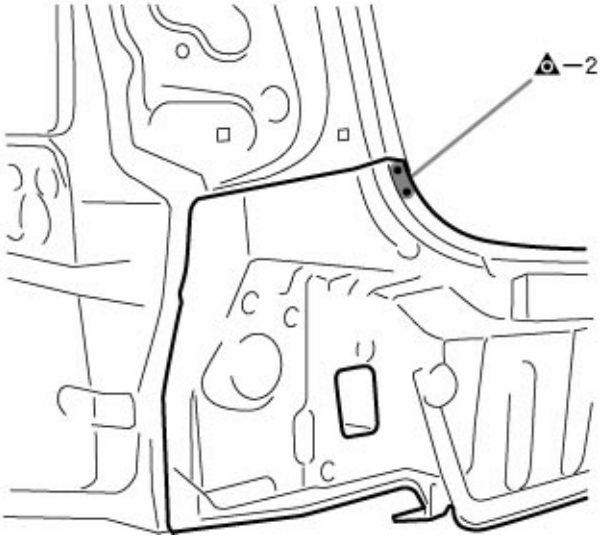

F14422

INSTALLATION

- Temporarily install the new parts and measure each part of the new parts in accordance with the body dimension diagram. (See the body dimension diagram)
- Inspect the fitting of the related parts around the new parts before welding. This affects the appearance of the finish.
- After welding, apply the polyurethane foam to the corresponding parts.
- After welding, apply body sealer and under-coating to the corresponding parts.
- After applying the top coat layer, apply anti-rust agent to the inside of the necked section structural weld spots.

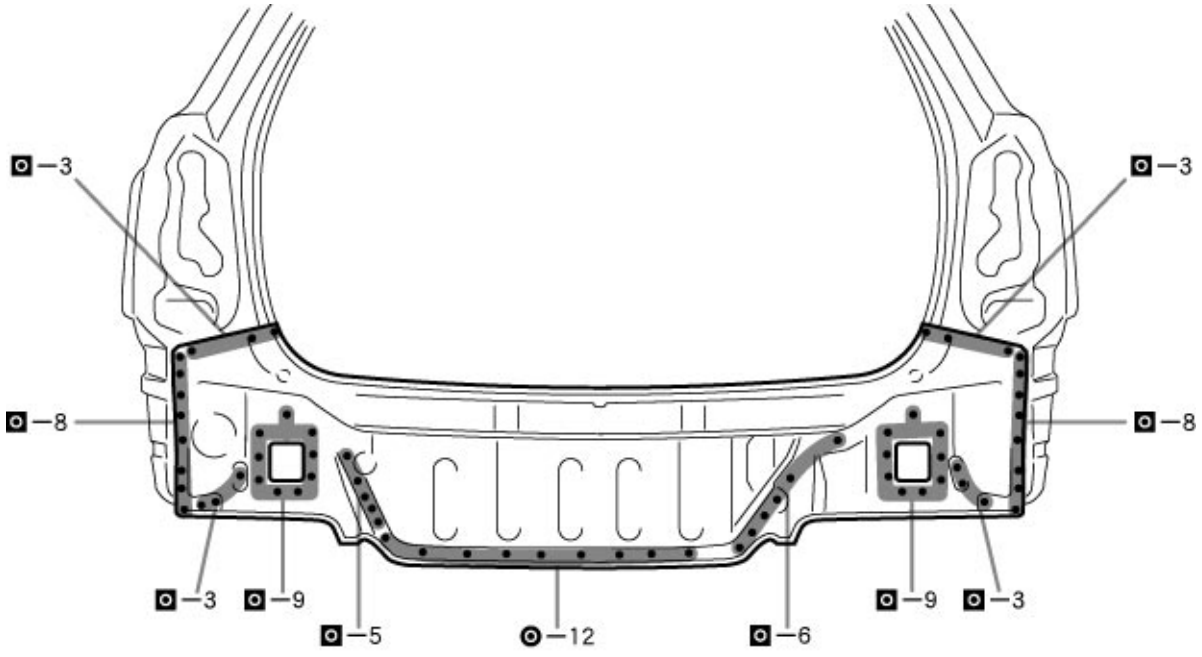

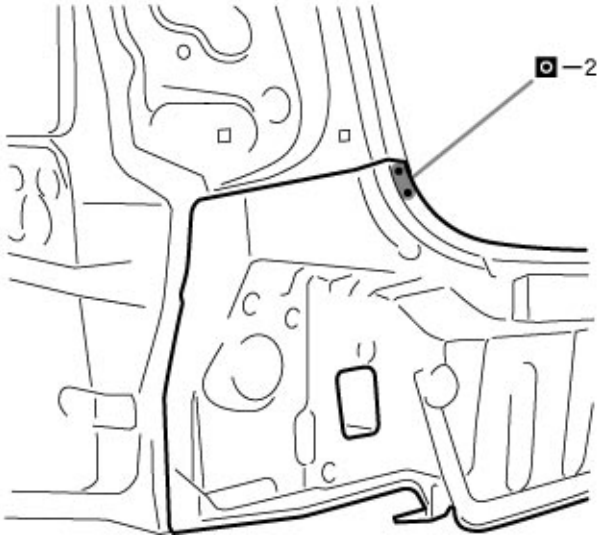

F14423

QUARTER PANEL END HOUSING (ASSY): Sedan



F14424-A

REMOVAL

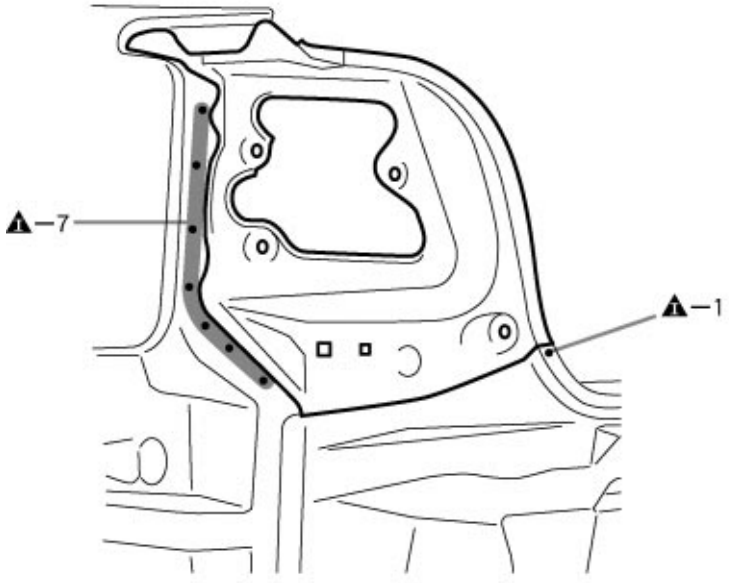

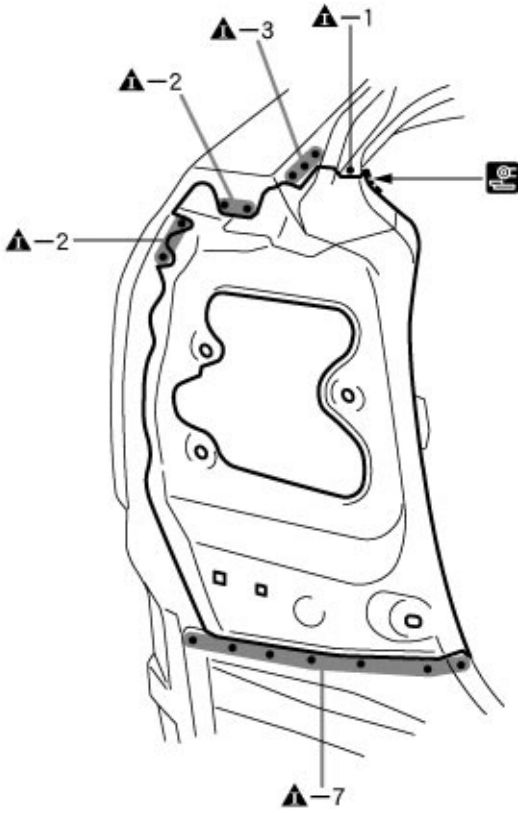

F14424

INSTALLATION

- Temporarily install the new parts and measure each part of the new parts in accordance with the body dimension diagram. (See the body dimension diagram)
- Inspect the fitting of the related parts around the new parts before welding. This affects the appearance of the finish.
- After welding, apply the polyurethane foam to the corresponding parts.
- After welding, apply body sealer and under-coating to the corresponding parts.
- After applying the top coat layer, apply anti-rust agent to the inside of the necked section structural weld spots.

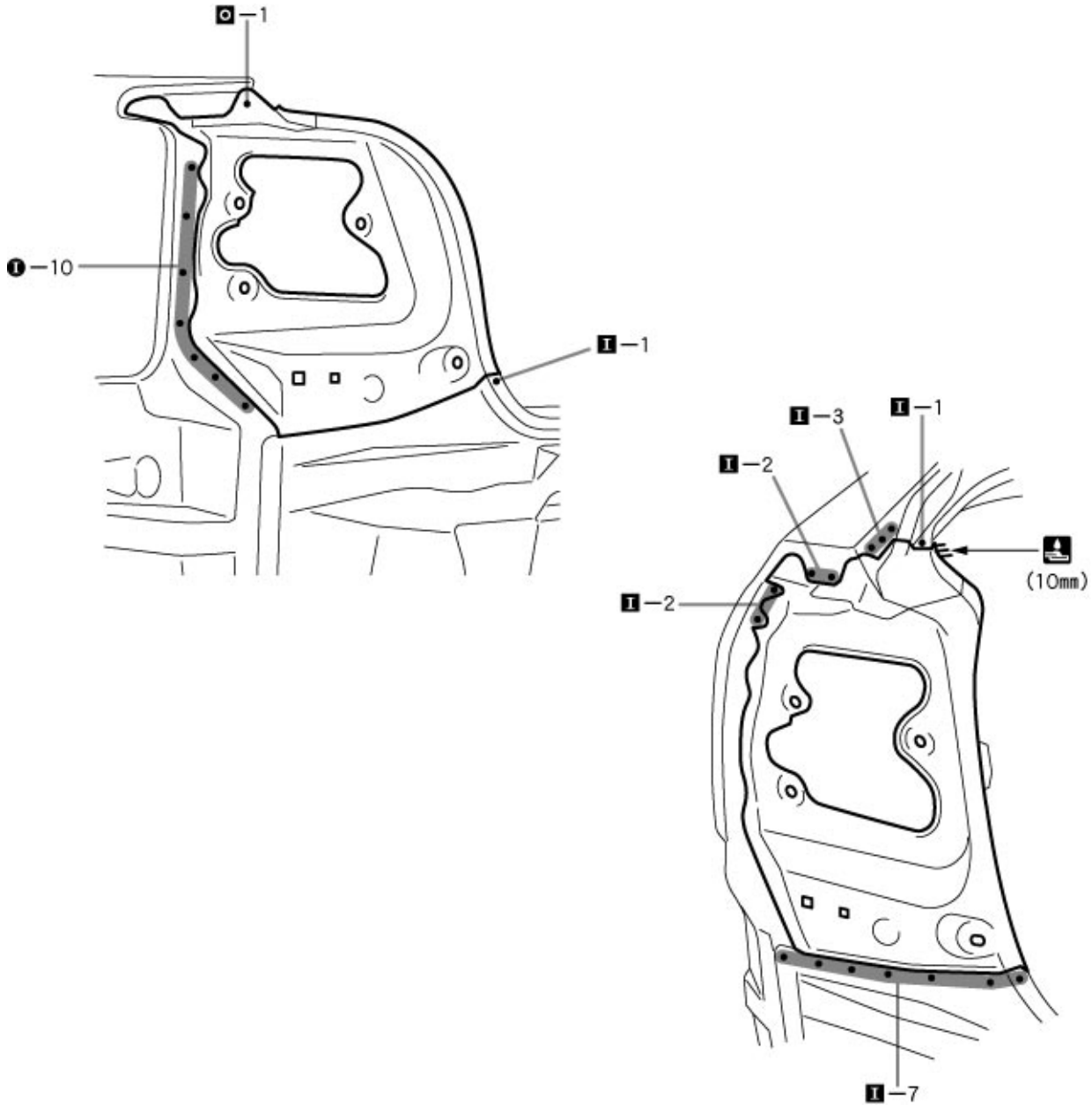

F14425

10mm (0.39in.)

QUARTER PANEL END HOUSING (ASSY): Liftback



F14430-A

REMOVAL
With the body lower back panel removed.

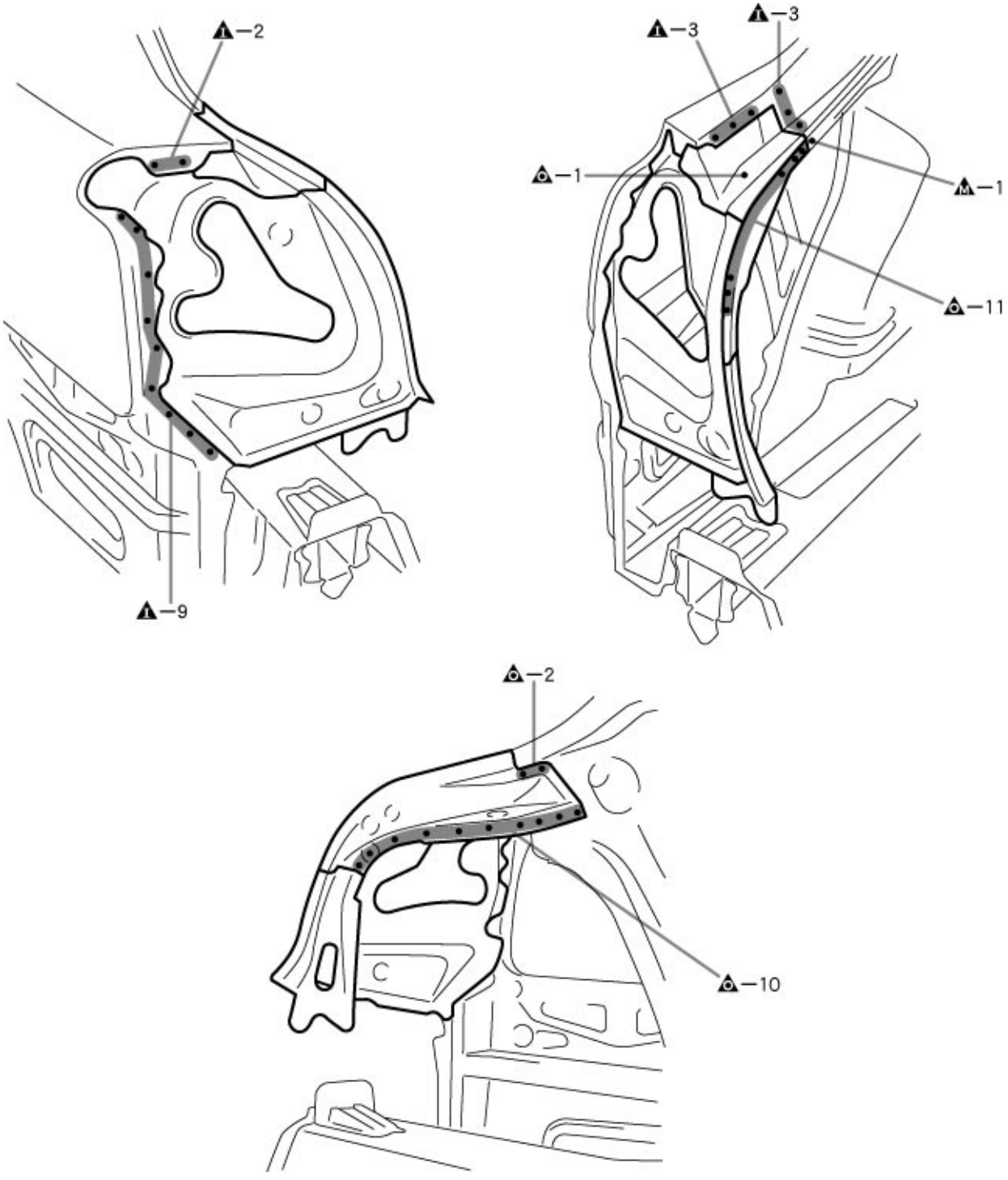

F14430

INSTALLATION

- Temporarily install the new parts and measure each part of the new parts in accordance with the body dimension diagram. (See the body dimension diagram)
- Inspect the fitting of the related parts around the new parts before welding. This affects the appearance of the finish.
- After welding, apply the polyurethane foam to the corresponding parts.
- After welding, apply body sealer and under-coating to the corresponding parts.
- After applying the top coat layer, apply anti-rust agent to the inside of the necked section structural weld spots.

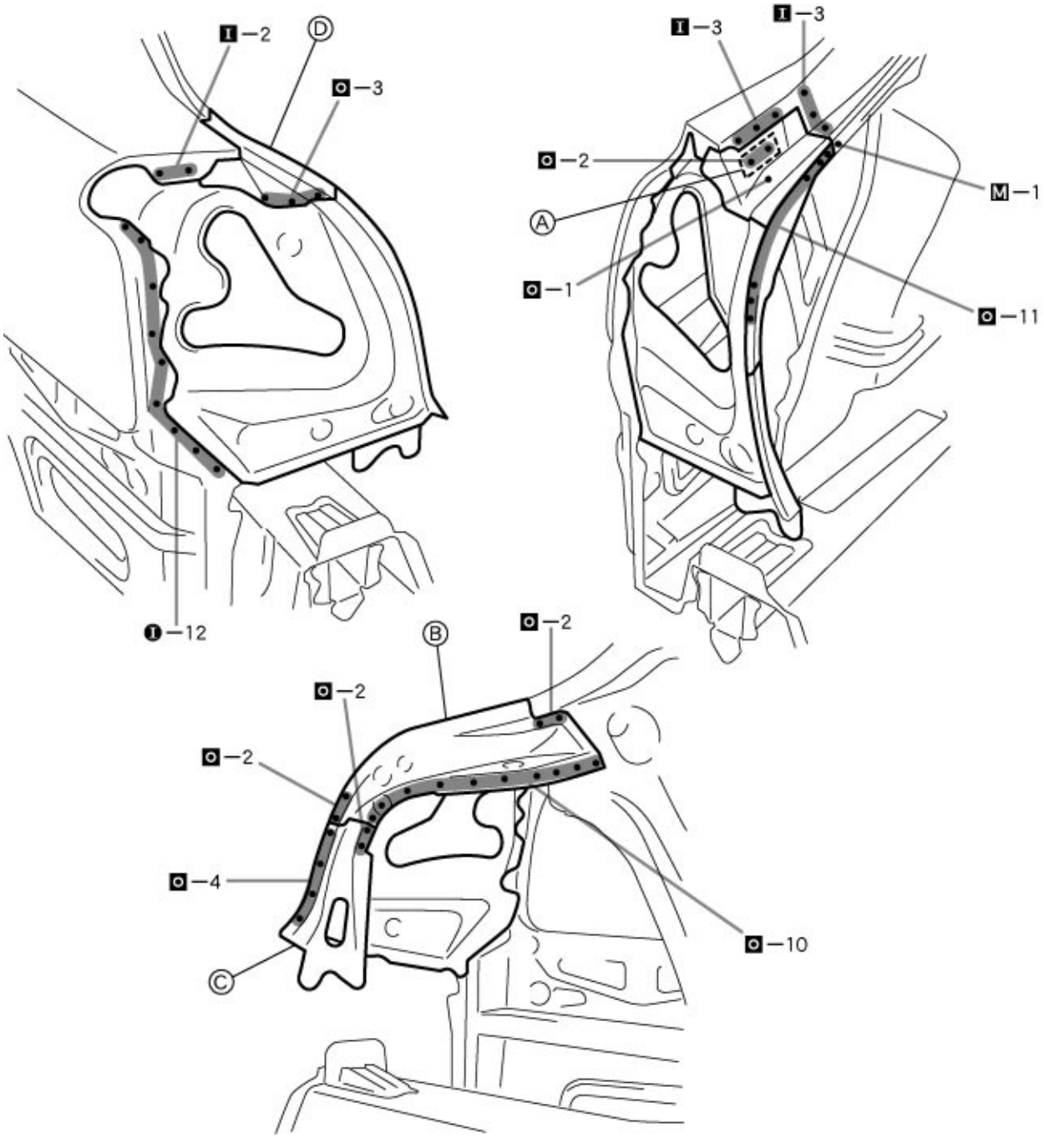

F14431

PART NAME

Ⓐ Back Door Opening Lower Reinforcement
Ⓑ Roof Side Inner Lower Panel
Ⓒ Quarter Panel Rear Lower Extension
Ⓓ Back Door Opening Trough

QUARTER PANEL END HOUSING (ASSY): Wagon



F14426-A

REMOVAL
With the body lower back panel removed.

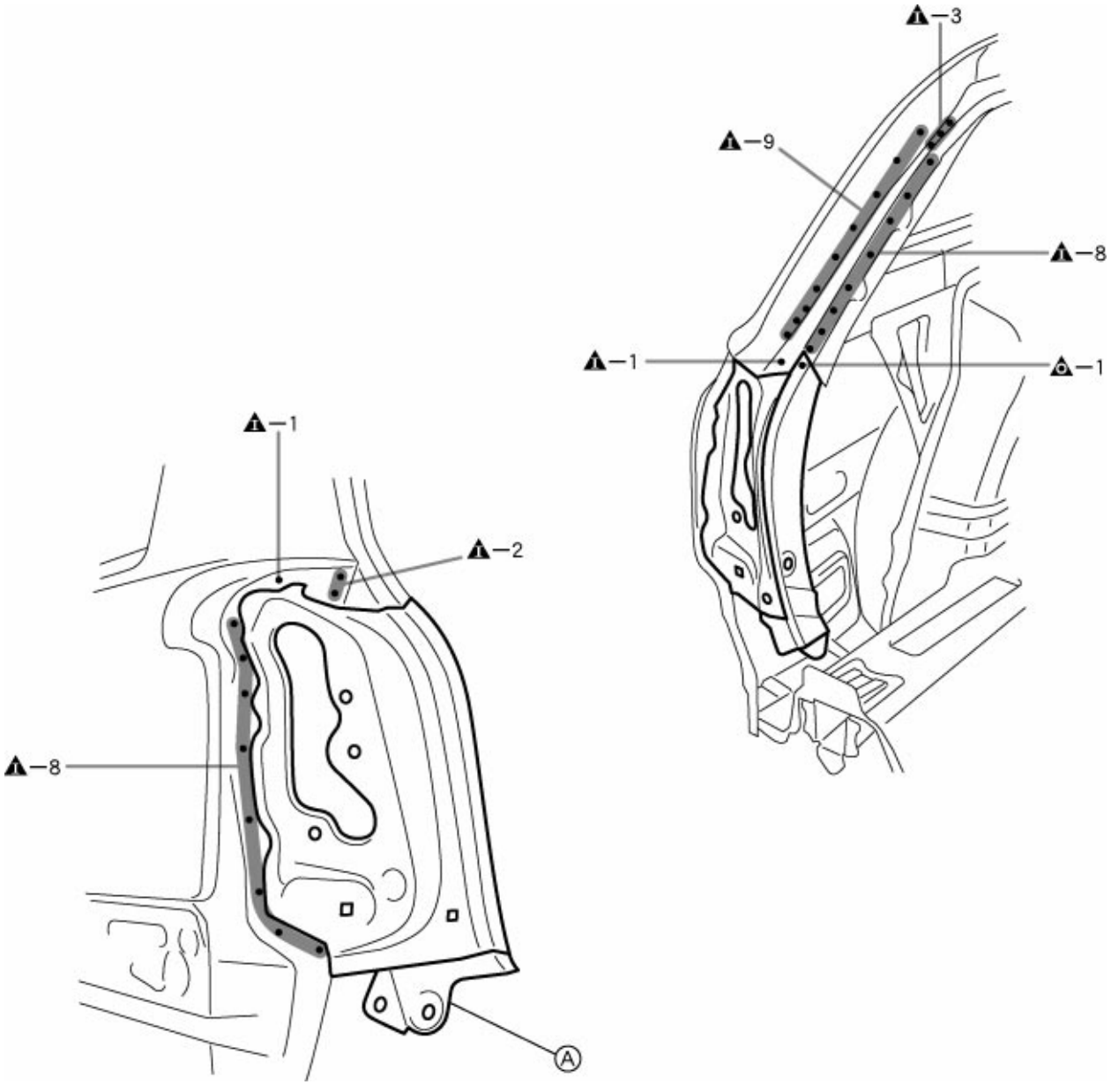

F14426

POINT
1 Remove the Ⓐ at the same time.

PART NAME
Ⓐ Roof Side Inner Lower Panel

INSTALLATION

- Temporarily install the new parts and measure each part of the new parts in accordance with the body dimension diagram. (See the body dimension diagram)
- Inspect the fitting of the related parts around the new parts before welding. This affects the appearance of the finish.
- After welding, apply the polyurethane foam to the corresponding parts.
- After welding, apply body sealer and under-coating to the corresponding parts.
- After applying the top coat layer, apply anti-rust agent to the inside of the necked section structural weld spots.

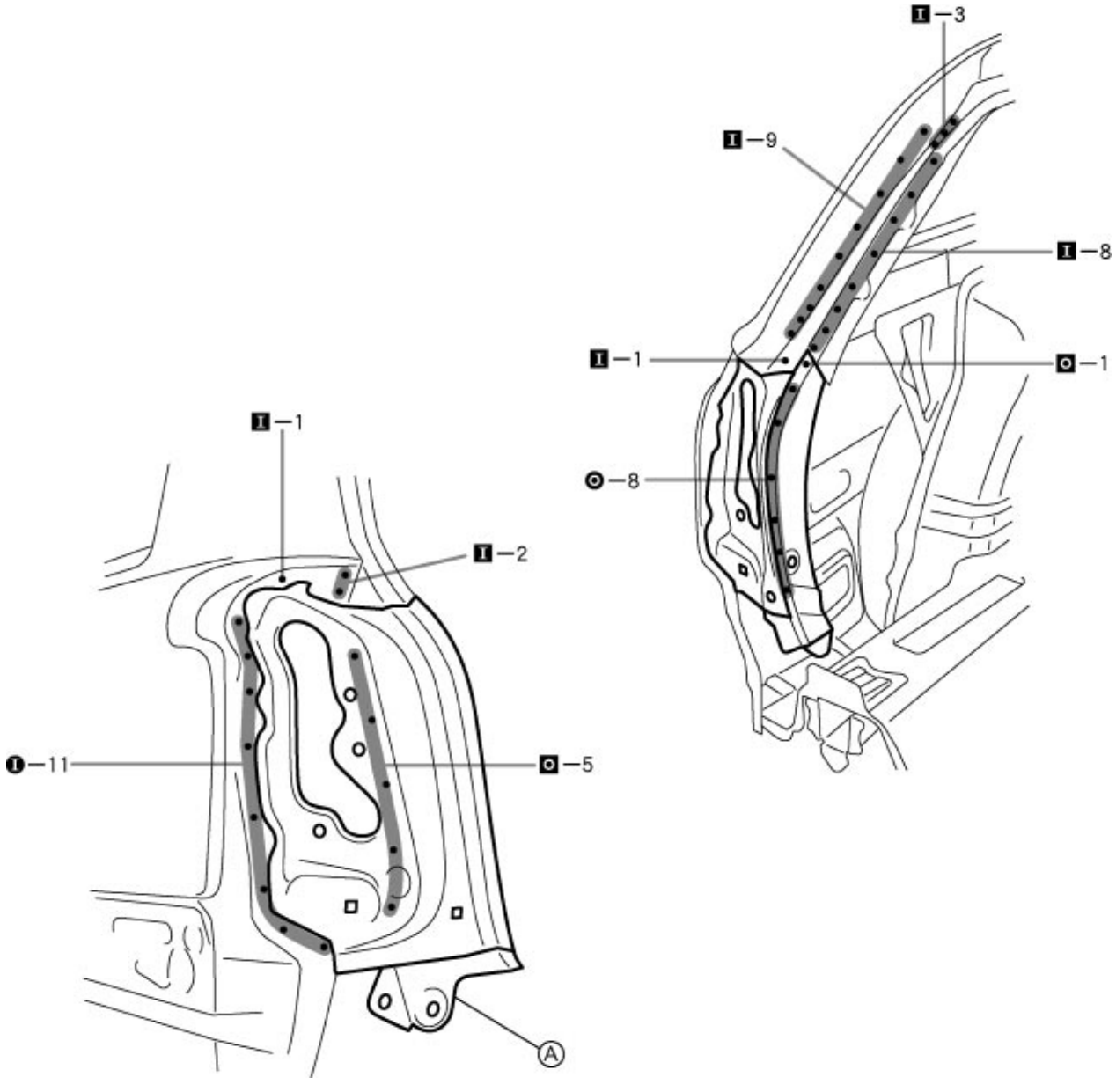

F14427

PART NAME

Ⓐ Roof Side Inner Lower Panel

BACK DOOR OPENING SIDE REINFORCEMENT (ASSY): Liftback



F14428-A

REMOVAL

With the quarter panel, quarter panel end housing removed.

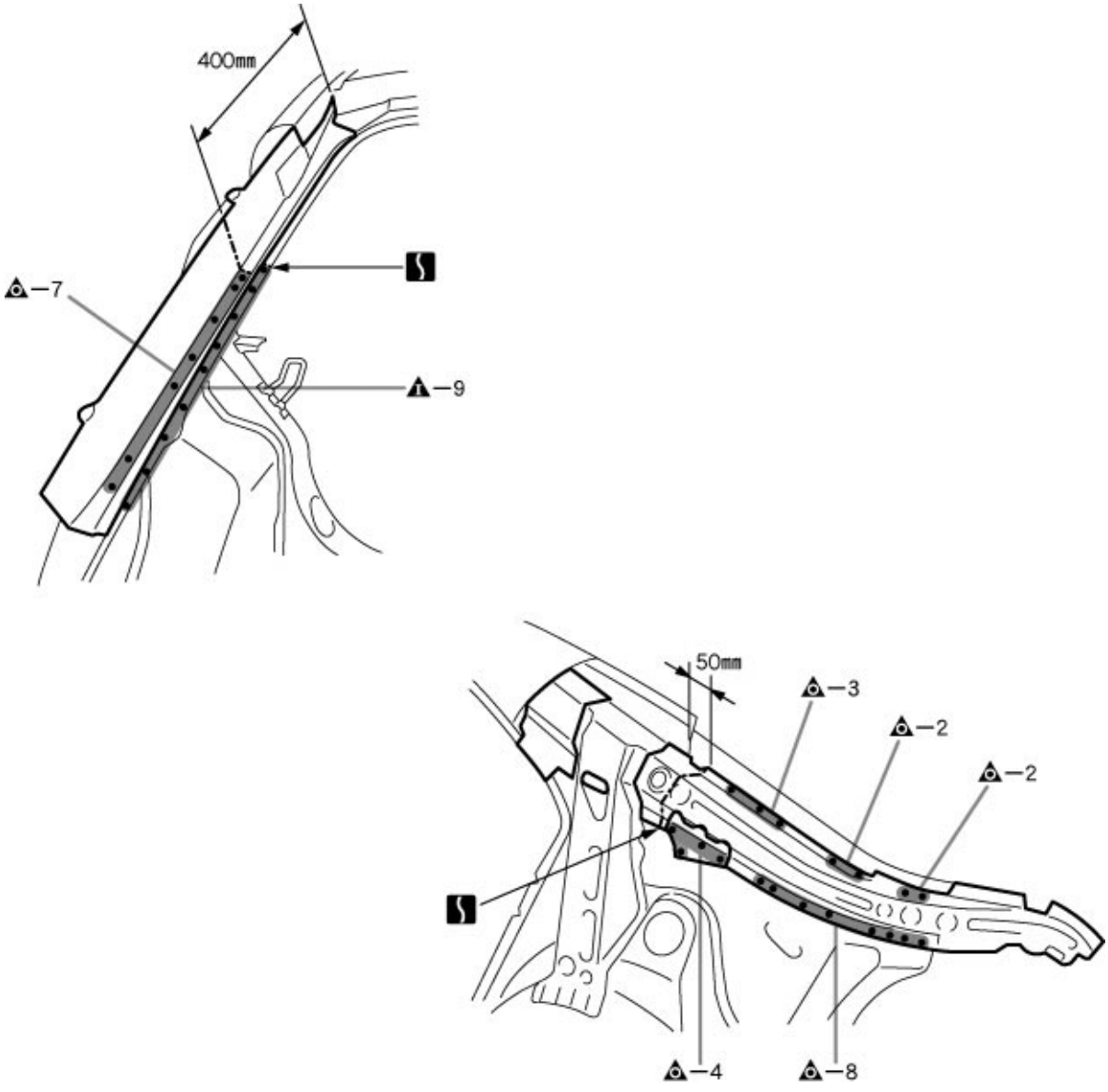

F14428

50mm (1.97in.) 400mm (15.75in.)

INSTALLATION

- Temporarily install the new parts and measure each part of the new parts in accordance with the body dimension diagram. (See the body dimension diagram)
- Inspect the fitting of the related parts around the new parts before welding. This affects the appearance of the finish.
- After welding, apply the polyurethane foam to the corresponding parts.
- After welding, apply body sealer and under-coating to the corresponding parts.
- After applying the top coat layer, apply anti-rust agent to the inside of the necked section structural weld spots.

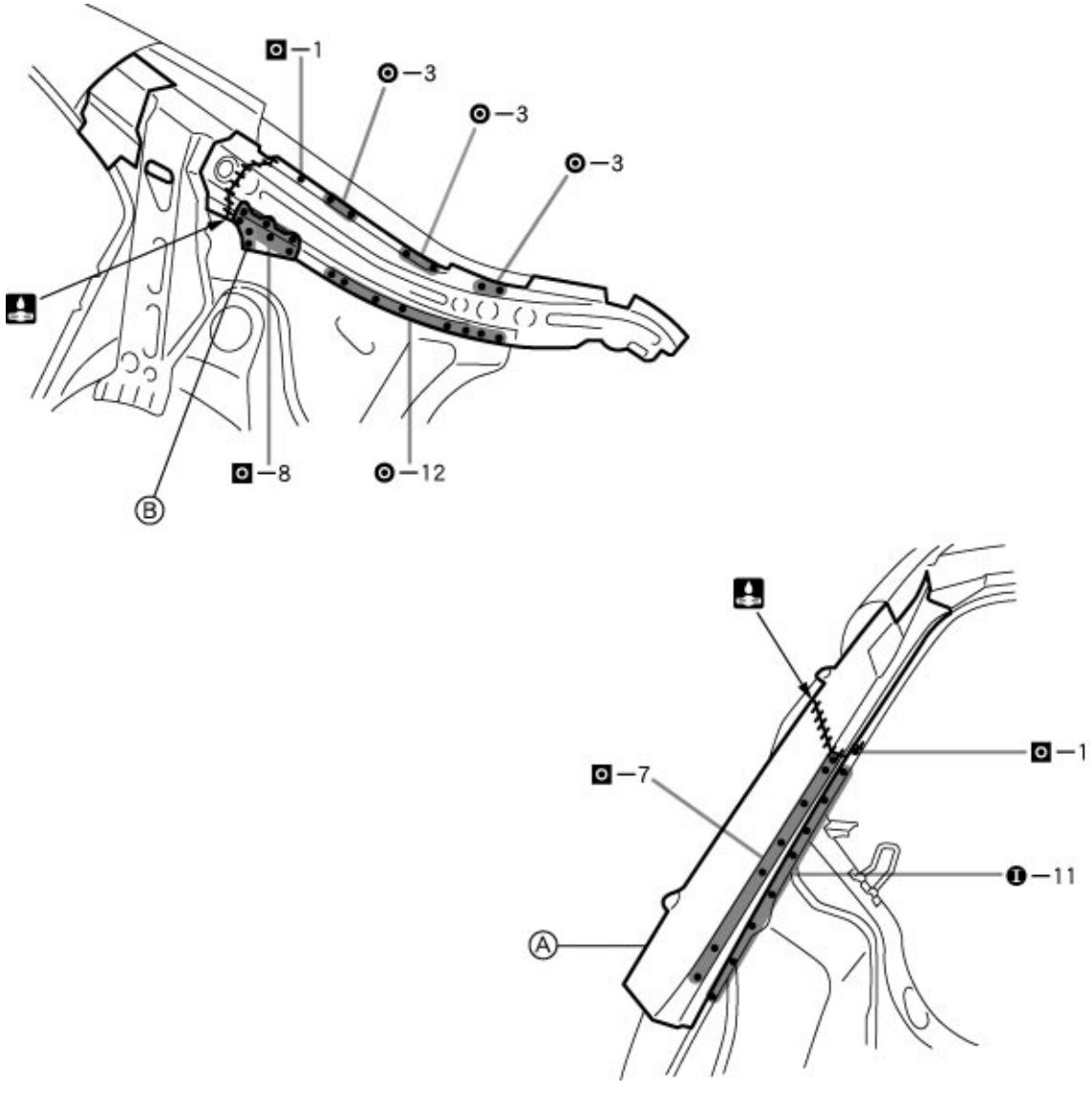

F14429

PART NAME

Ⓐ Quarter Panel Rear Extension
Ⓑ Belt Anchor To Roof Side Inner Reinforcement

REAR ABSORBER MOUNTING NO.1 BRACKET (ASSY): Sedan



F14432-A

REMOVAL

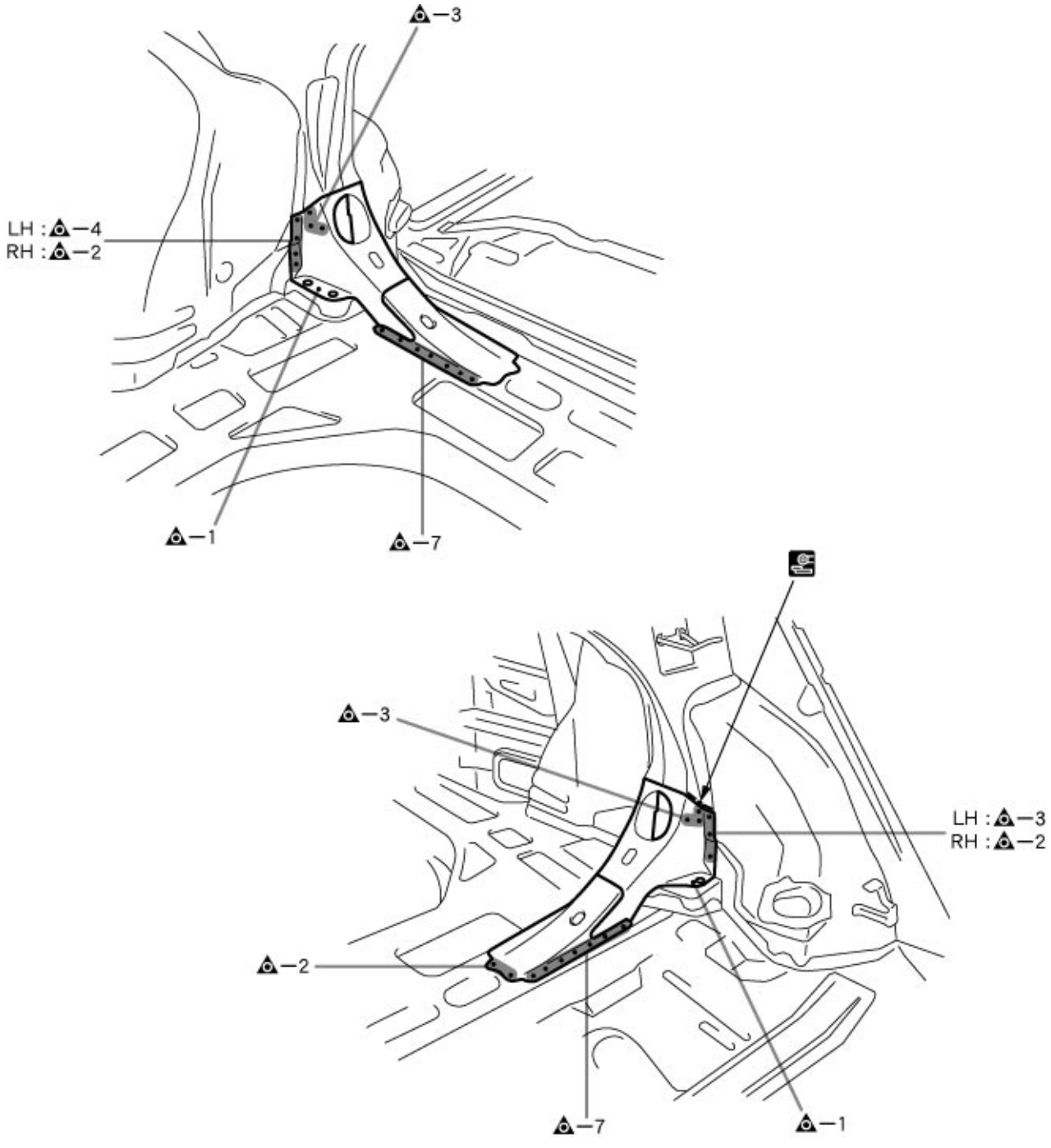

F14432

INSTALLATION

- Temporarily install the new parts and measure each part of the new parts in accordance with the body dimension diagram. (See the body dimension diagram)
- Inspect the fitting of the related parts around the new parts before welding. This affects the appearance of the finish.
- After welding, apply the polyurethane foam to the corresponding parts.
- After welding, apply body sealer and under-coating to the corresponding parts.
- After applying the top coat layer, apply anti-rust agent to the inside of the necked section structural weld spots.

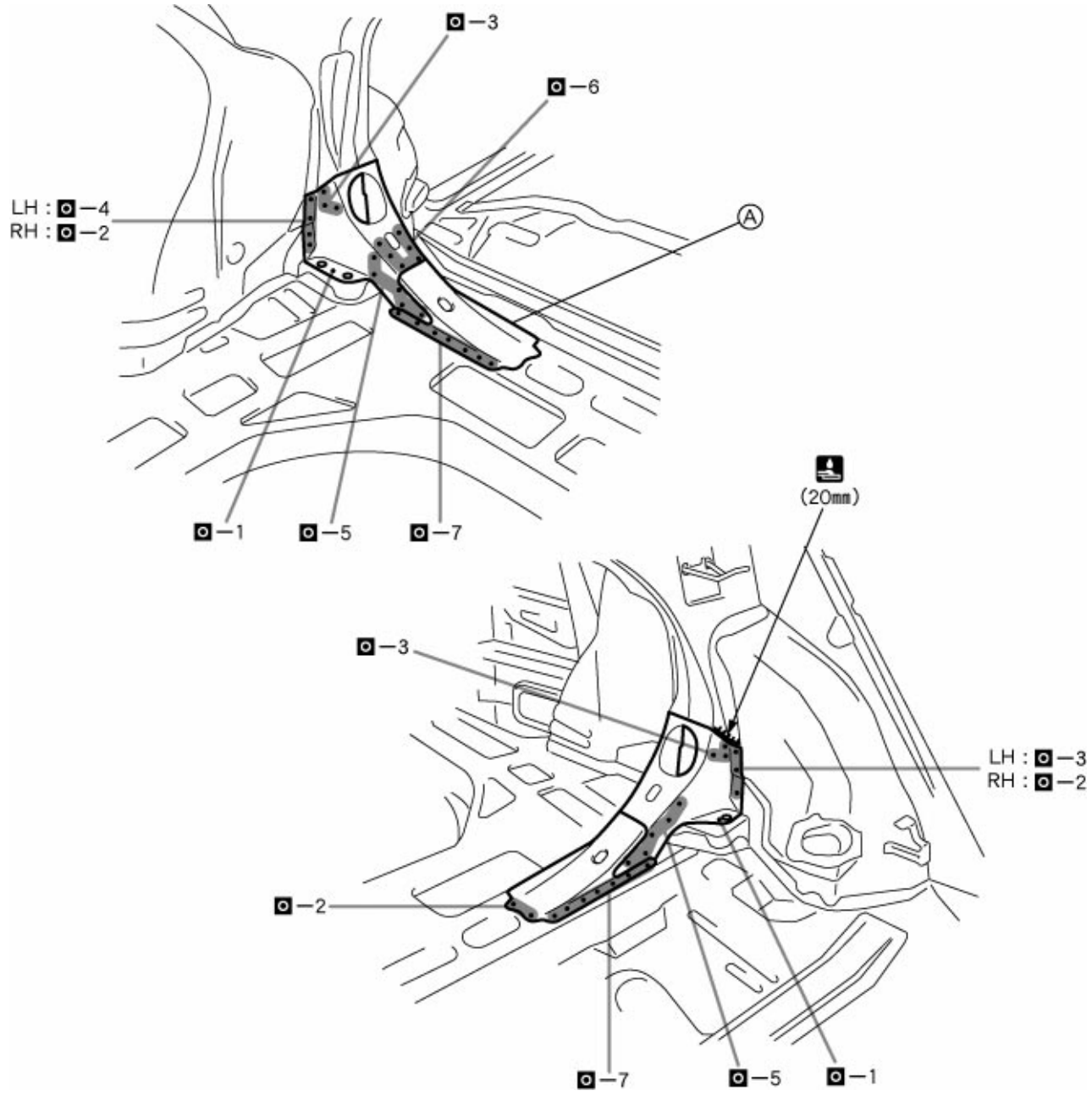

F14433

PART NAME

Ⓐ Rear Bumper Arm Bracket

REAR FLOOR CENTER CROSSMEMBER (ASSY): Liftback, Wagon

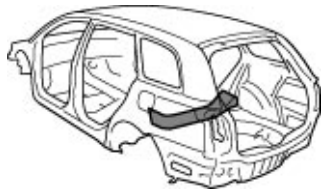

F14434-A

REMOVAL

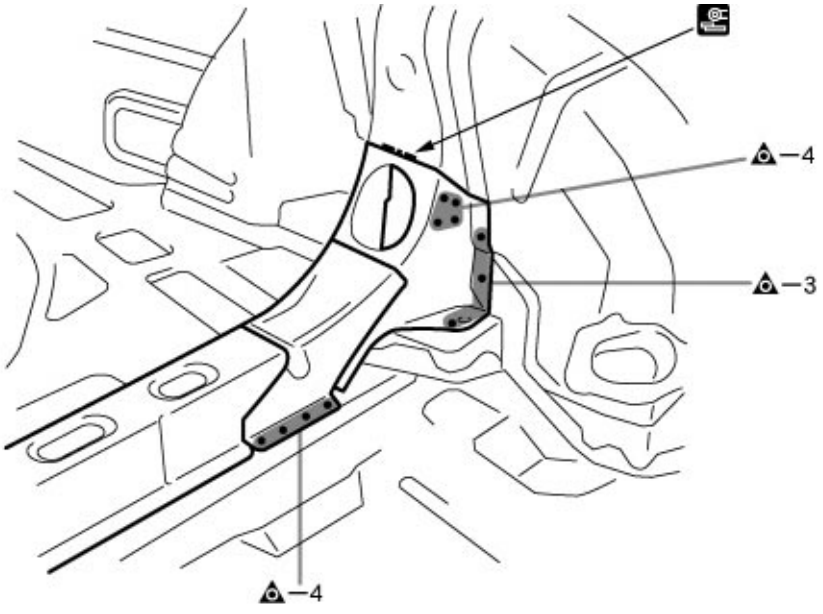

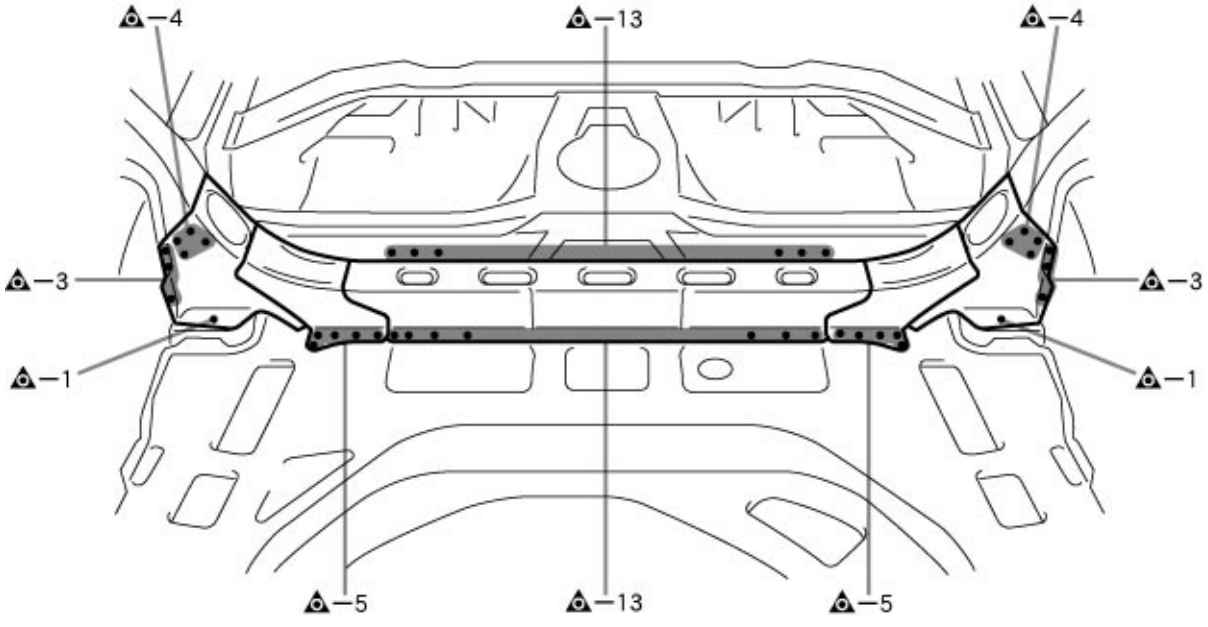

F14434

INSTALLATION

- Temporarily install the new parts and measure each part of the new parts in accordance with the body dimension diagram. (See the body dimension diagram)
- Inspect the fitting of the related parts around the new parts before welding. This affects the appearance of the finish.
- After welding, apply the polyurethane foam to the corresponding parts.
- After welding, apply body sealer and under-coating to the corresponding parts.
- After applying the top coat layer, apply anti-rust agent to the inside of the necked section structural weld spots.

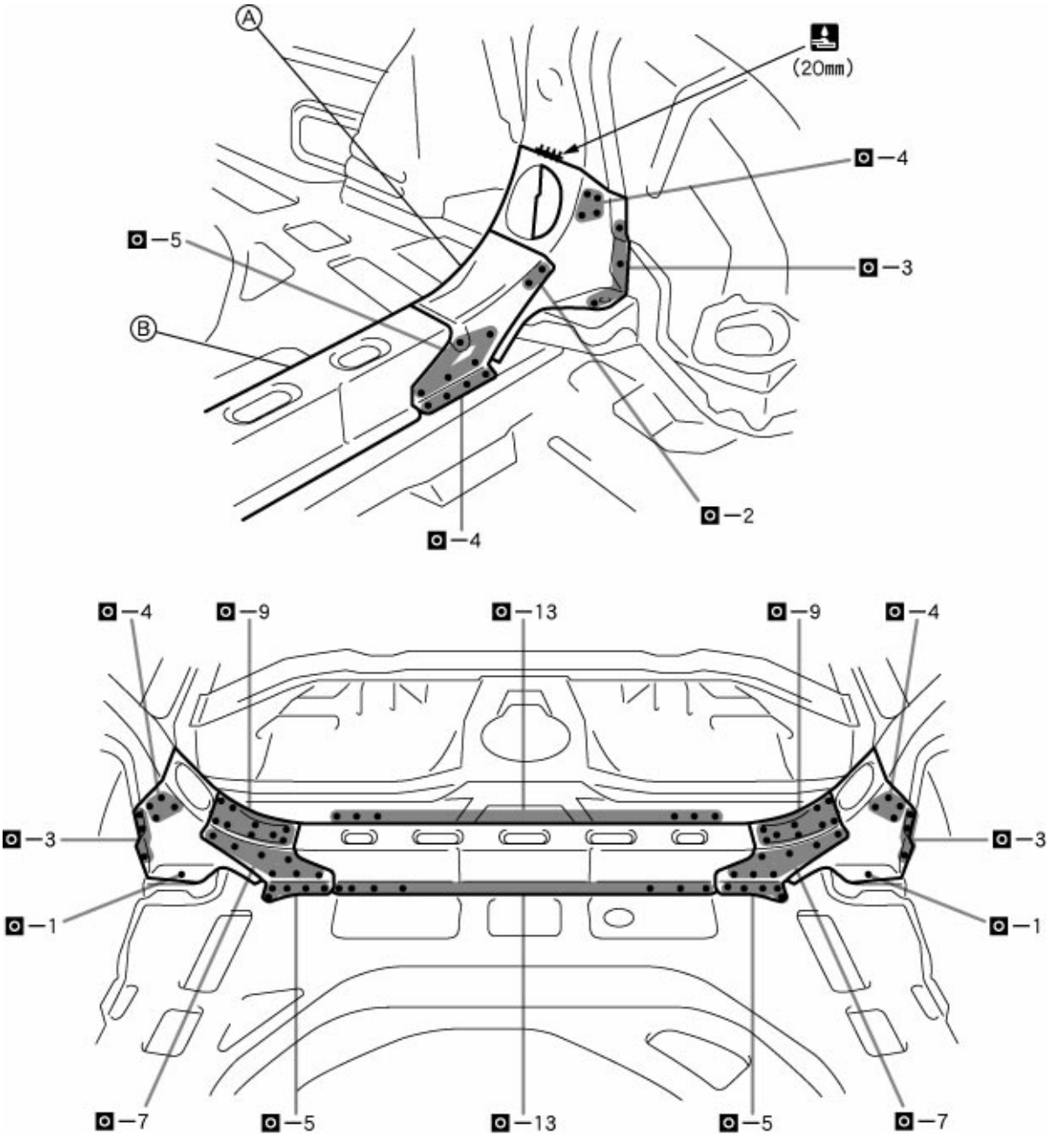

F14435

PART NAME

Ⓐ Rear Seat Back Hinge Mounting Bracket Ⓑ Rear Absorber Housing Bracket

20mm (0.79in.)

REAR FLOOR PAN (CUT)

REMOVAL
With the body lower back panel removed.

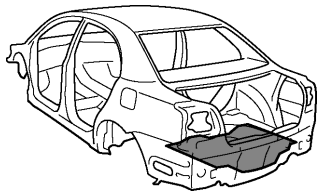

F14621-A

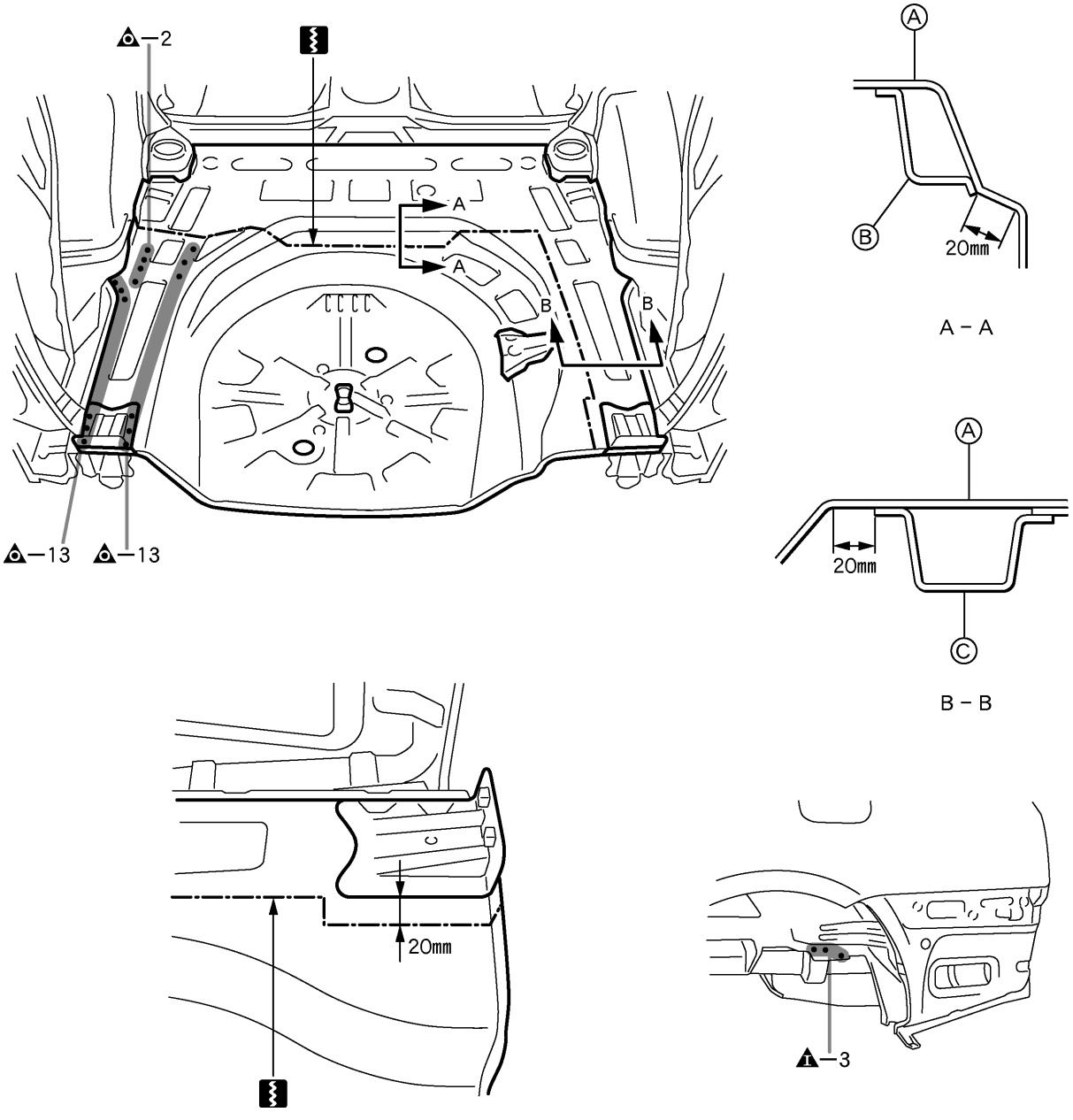

F14621

POINT
1 Cut the Ⓐ at the location shown below.

PART NAME
Ⓐ Rear Floor Pan Ⓑ Rear Floor No.3 Crossmember Ⓒ Rear Floor Side Rear Member
20mm (0.79in.)

INSTALLATION

- Temporarily install the new parts and measure each part of the new parts in accordance with the body dimension diagram. (See the body dimension diagram)
- Inspect the fitting of the related parts around the new parts before welding. This affects the appearance of the finish.
- After welding, apply the polyurethane foam to the corresponding parts.
- After welding, apply body sealer and under-coating to the corresponding parts.
- After applying the top coat layer, apply anti-rust agent to the inside of the necked section structural weld spots.

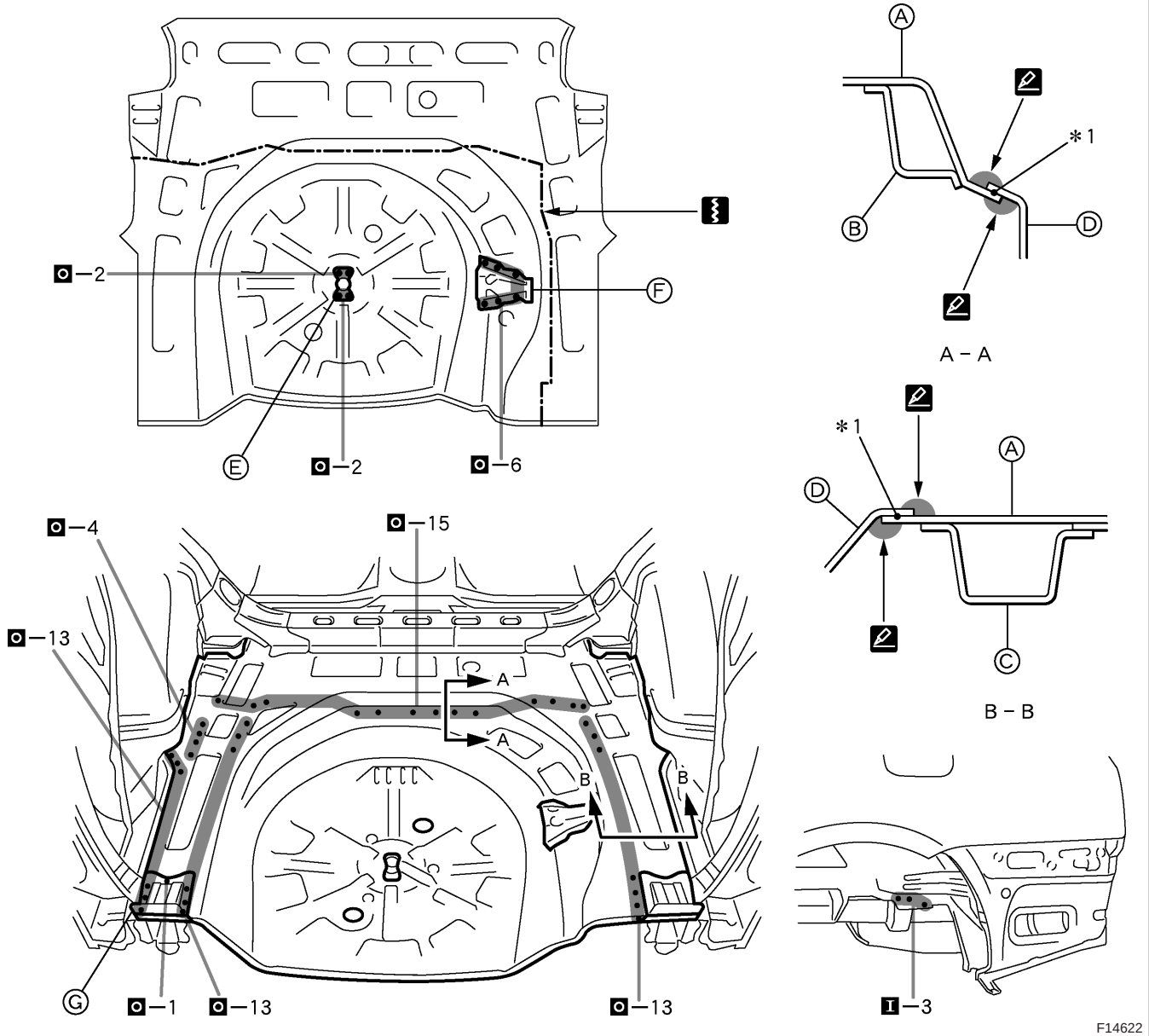

POINT

1 Cut the Ⓓ for the Ⓐ at the location as shown below.
2 *1: Plug weld the overlapping portion of the Ⓓ.
HINT:
1) Be sure the portion to be welded are align and not loose.
3 Coat the overlapping opening portion from the both sides with body sealer.

PART NAME

Ⓐ Rear Floor Pan Ⓑ Rear Floor No.3 Crossmember Ⓒ Rear Floor Side Rear Member
Ⓓ New Parts Ⓔ Spare Wheel Clamp Bracket Ⓕ Jack Carrier
Ⓖ Rear Floor Pan Reinforcement

REAR FLOOR PAN (ASSY)

REMOVAL
With the body lower back panel, rear absorber No.1 bracket (sedan), rear floor center crossmember (liftback, wagon) removed.

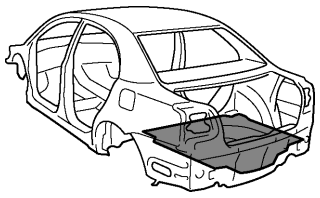

F14436-A

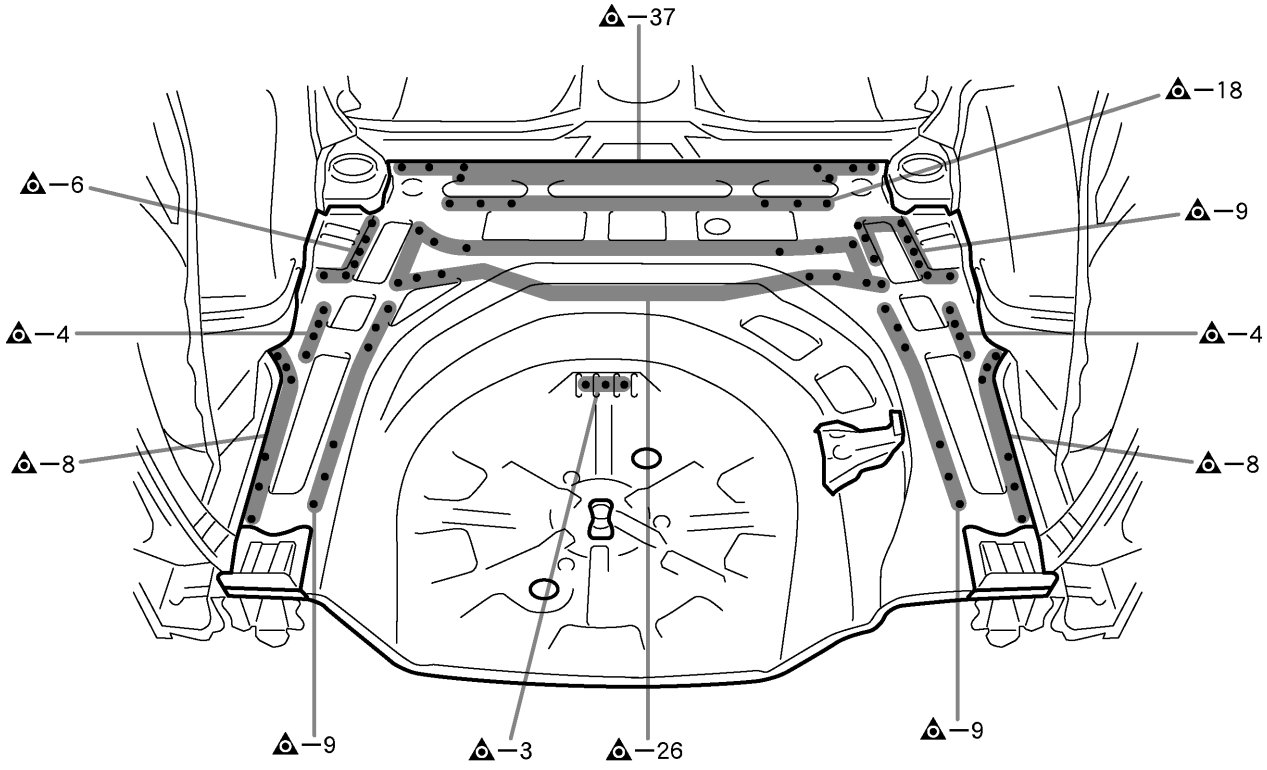

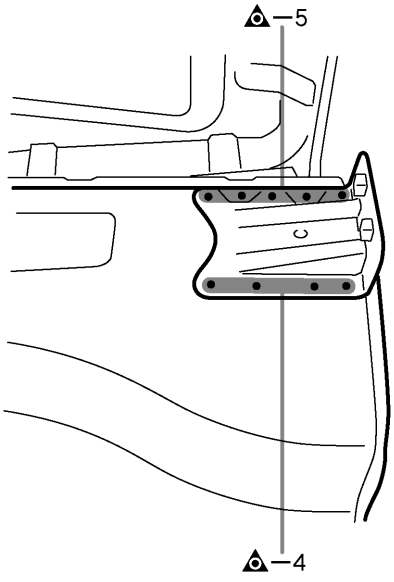

F14436

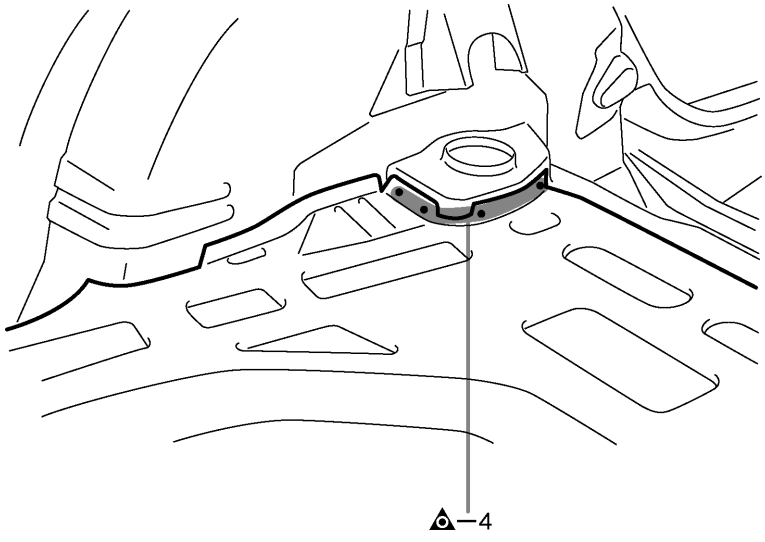

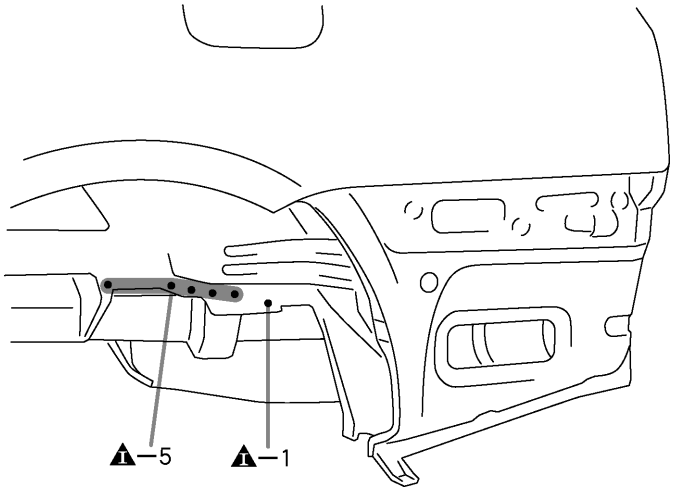

F14631

INSTALLATION

- Temporarily install the new parts and measure each part of the new parts in accordance with the body dimension diagram. (See the body dimension diagram)
- Inspect the fitting of the related parts around the new parts before welding. This affects the appearance of the finish.
- After welding, apply the polyurethane foam to the corresponding parts.
- After welding, apply body sealer and under-coating to the corresponding parts.
- After applying the top coat layer, apply anti-rust agent to the inside of the necked section structural weld spots.

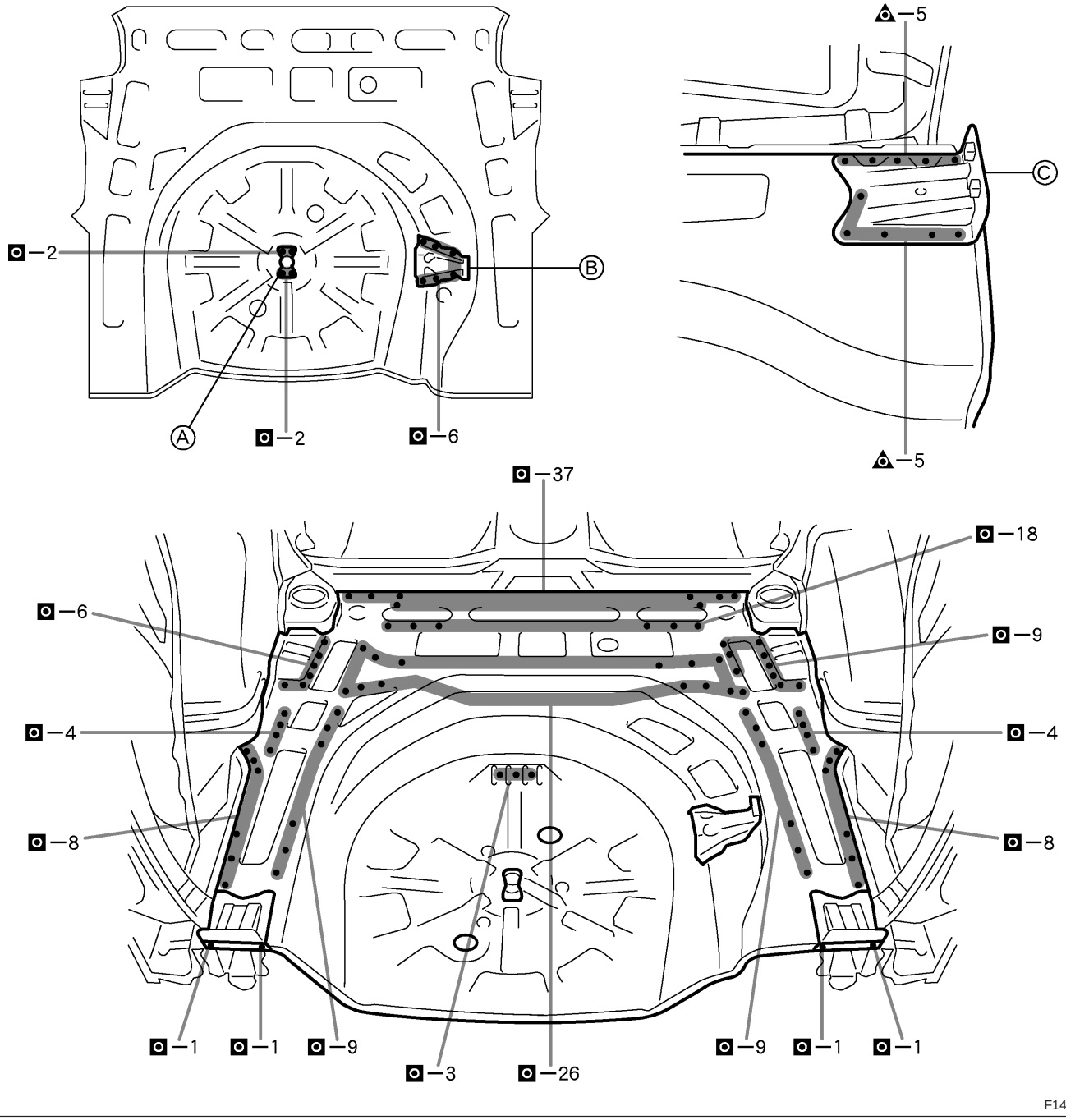

F14437

PART NAME

Ⓐ Spare Wheel Clamp Bracket Ⓑ Jack Carrier Ⓒ Rear Floor Pan Reinforcement

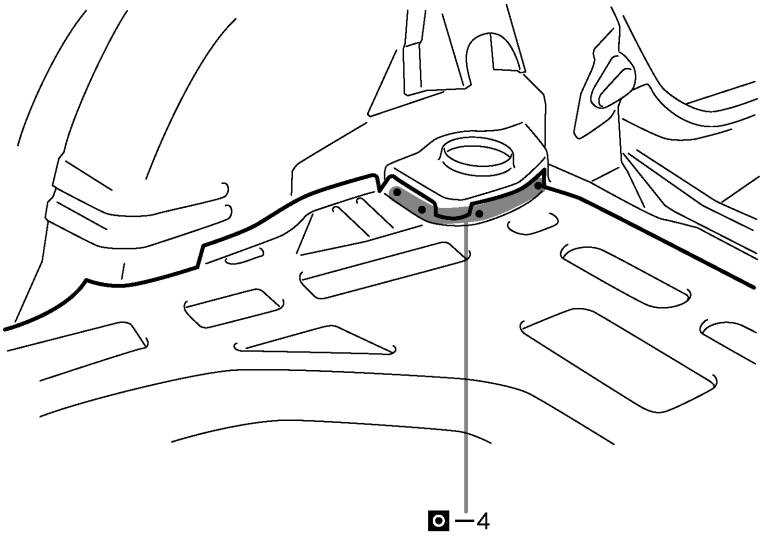

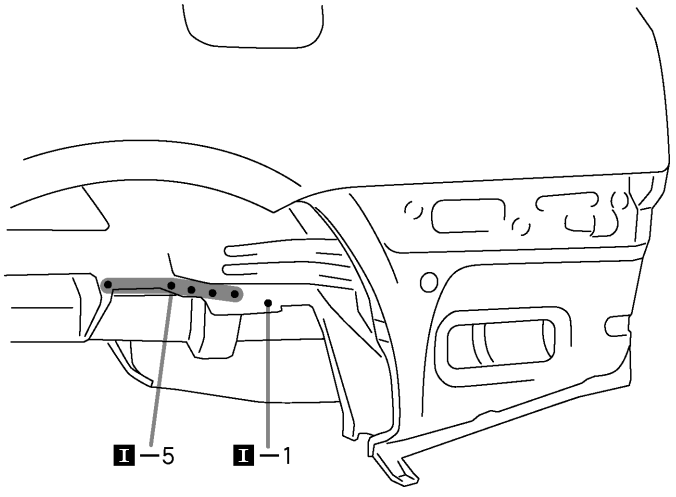

F14438

REAR FLOOR SIDE PANEL (ASSY)

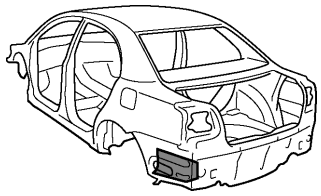

F14439-A

REMOVAL
With the body lower back panel removed.

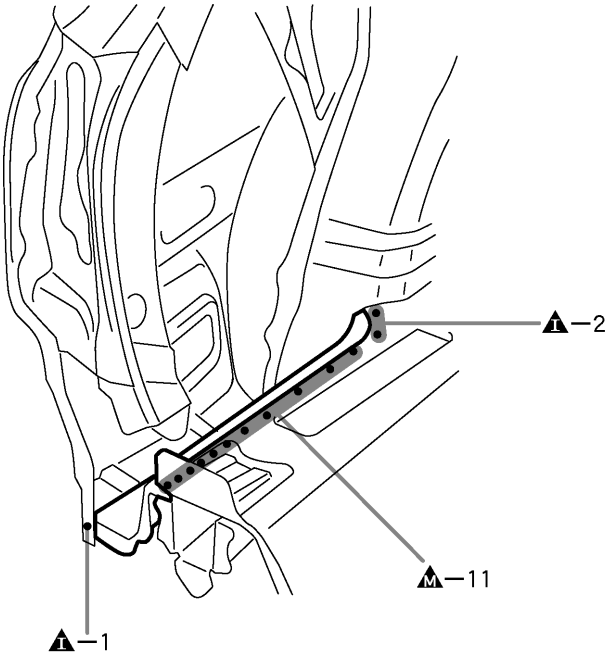

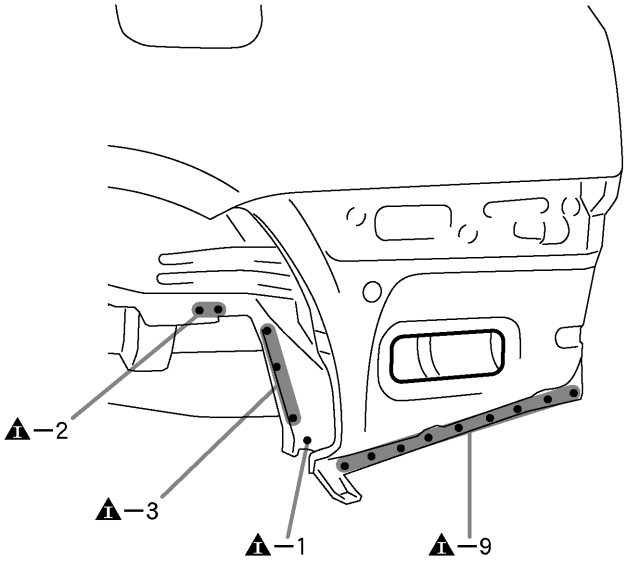

F14439

INSTALLATION

- Temporarily install the new parts and measure each part of the new parts in accordance with the body dimension diagram. (See the body dimension diagram)
- Inspect the fitting of the related parts around the new parts before welding. This affects the appearance of the finish.
- After welding, apply the polyurethane foam to the corresponding parts.
- After welding, apply body sealer and under-coating to the corresponding parts.
- After applying the top coat layer, apply anti-rust agent to the inside of the necked section structural weld spots.

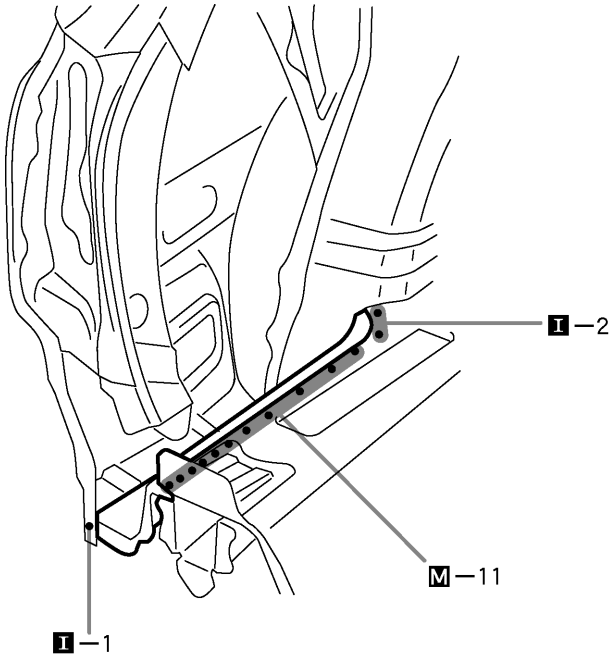

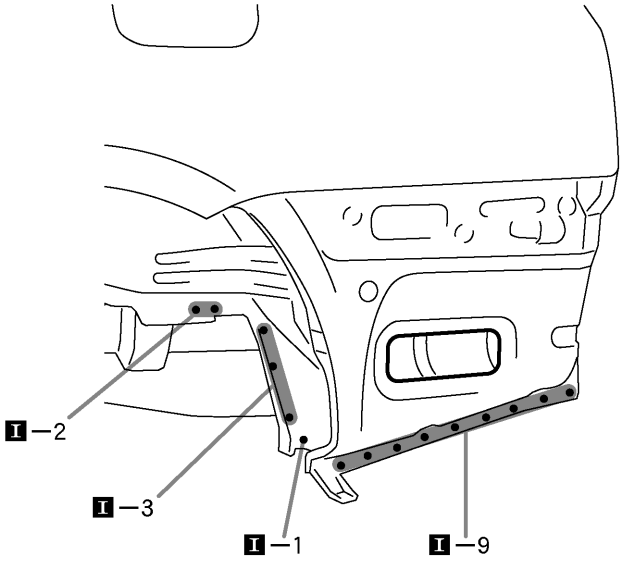

F14440

REAR FLOOR NO.3 CROSSMEMBER (ASSY)

REMOVAL

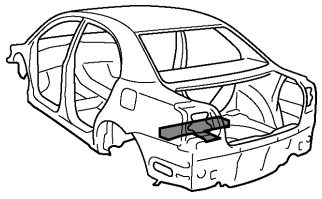

F14441-A

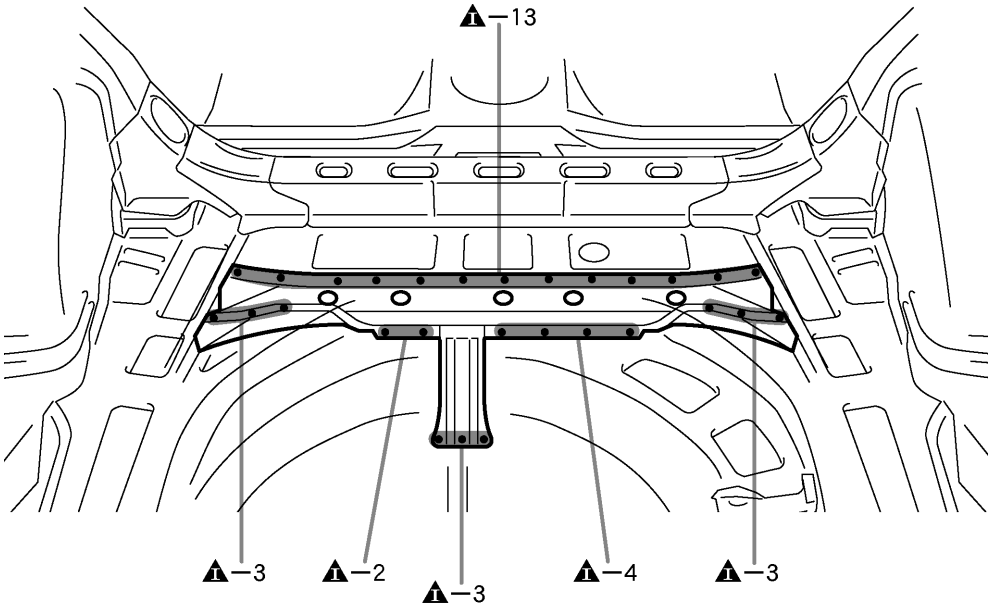

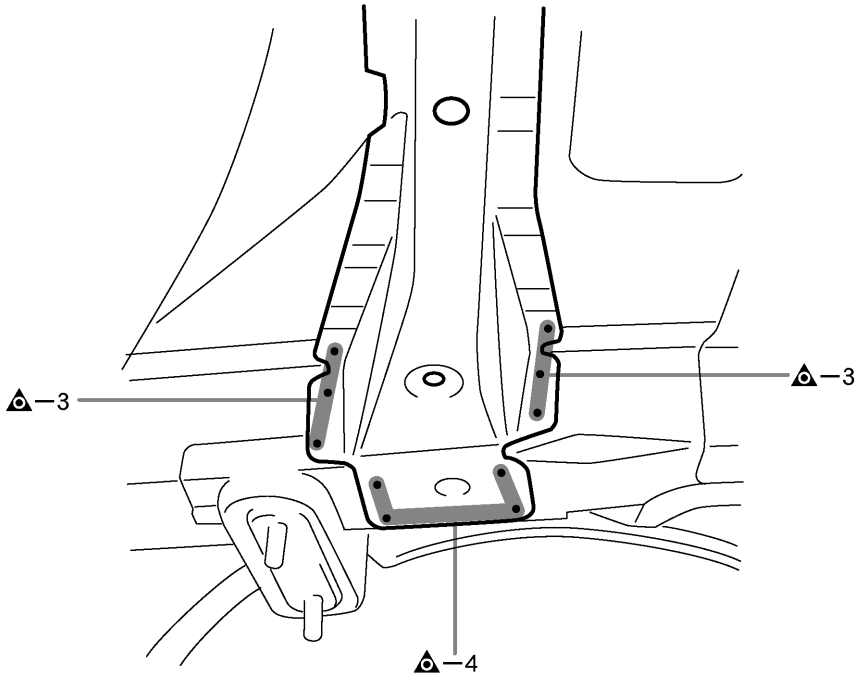

F14441

INSTALLATION

- Temporarily install the new parts and measure each part of the new parts in accordance with the body dimension diagram. (See the body dimension diagram)
- Inspect the fitting of the related parts around the new parts before welding. This affects the appearance of the finish.
- After welding, apply the polyurethane foam to the corresponding parts.
- After welding, apply body sealer and under-coating to the corresponding parts.
- After applying the top coat layer, apply anti-rust agent to the inside of the necked section structural weld spots.

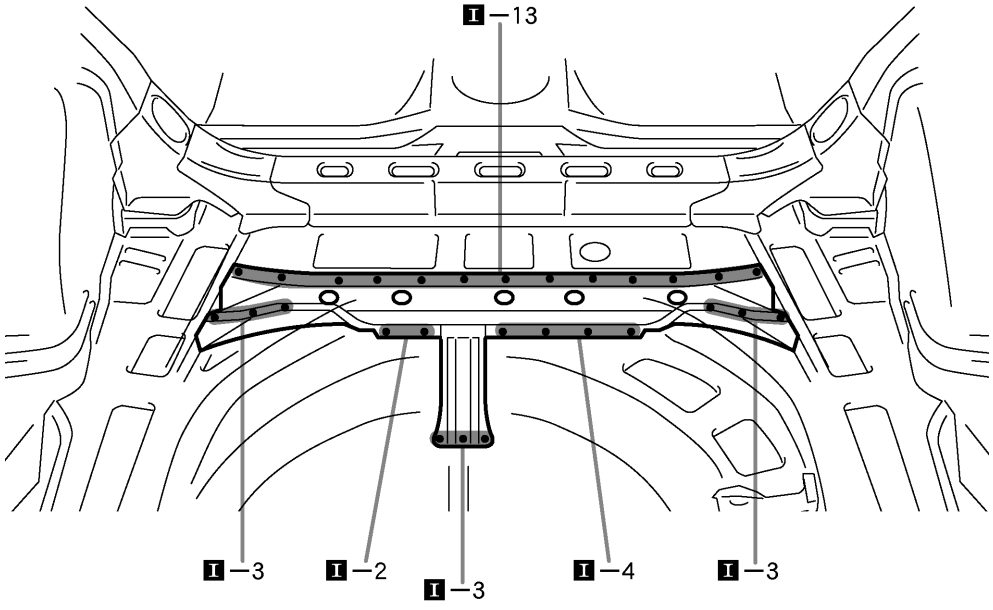

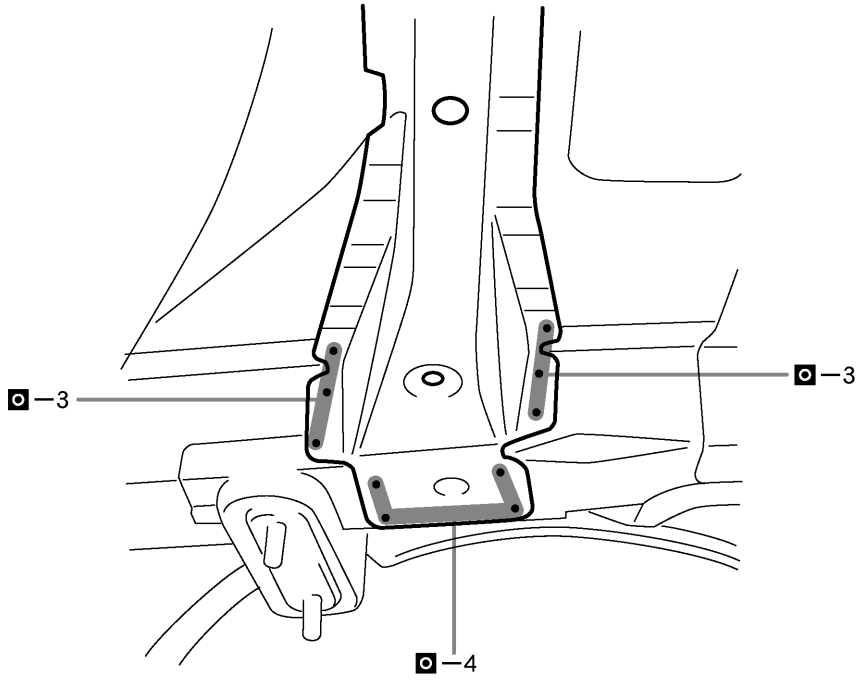

F14442

REAR FLOOR NO.2 CROSSMEMBER (ASSY)

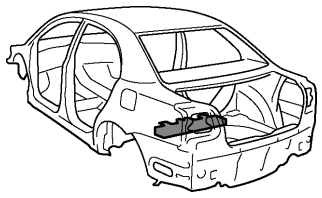

F14445-A

REMOVAL

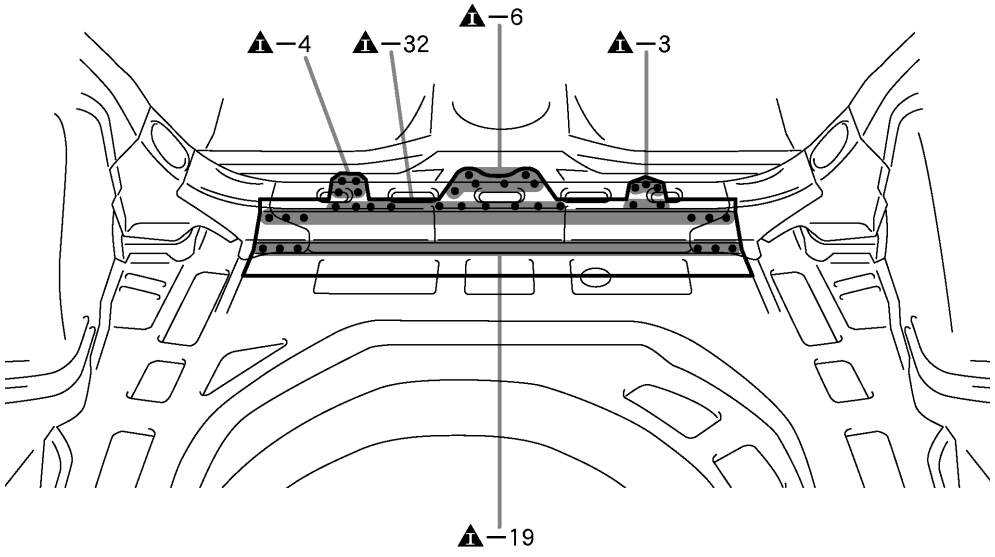

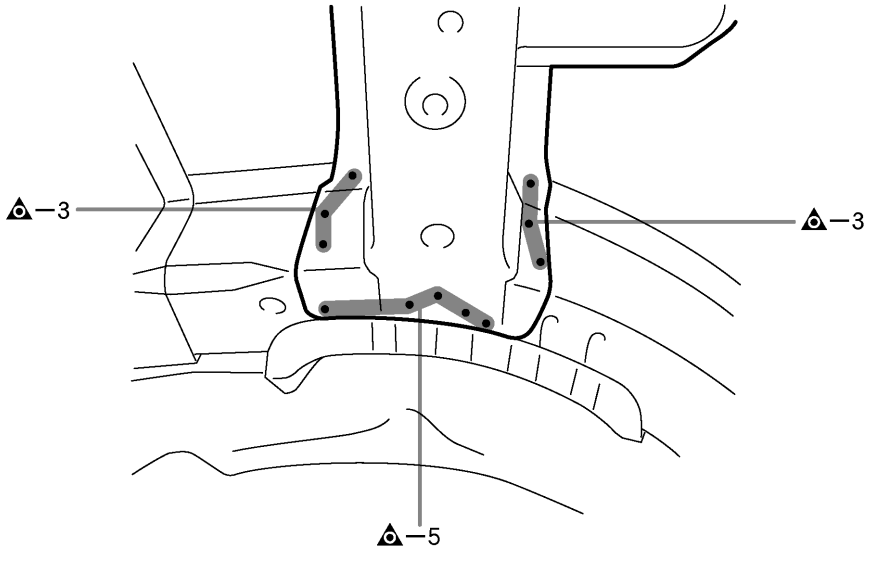

F14445

INSTALLATION

- Temporarily install the new parts and measure each part of the new parts in accordance with the body dimension diagram. (See the body dimension diagram)
- Inspect the fitting of the related parts around the new parts before welding. This affects the appearance of the finish.
- After welding, apply the polyurethane foam to the corresponding parts.
- After welding, apply body sealer and under-coating to the corresponding parts.
- After applying the top coat layer, apply anti-rust agent to the inside of the necked section structural weld spots.

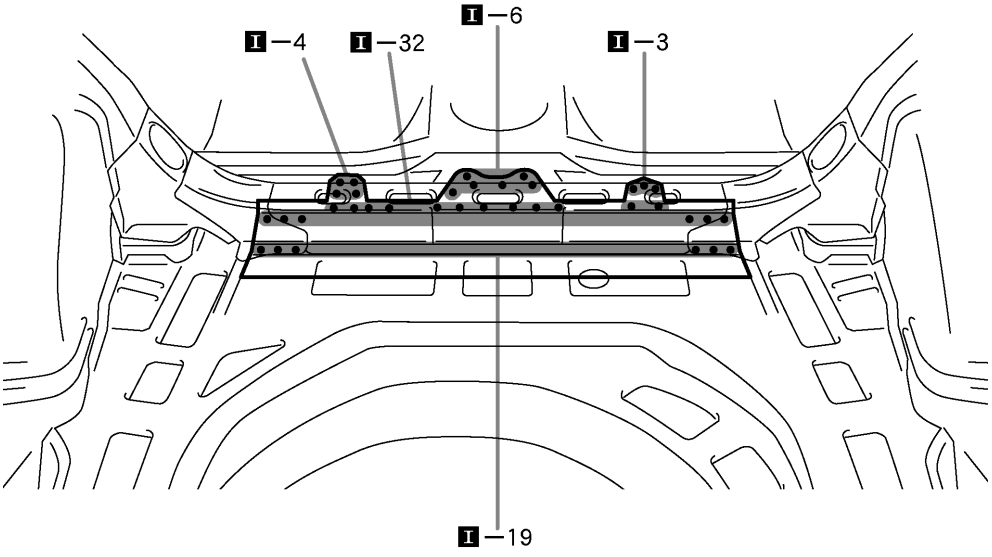

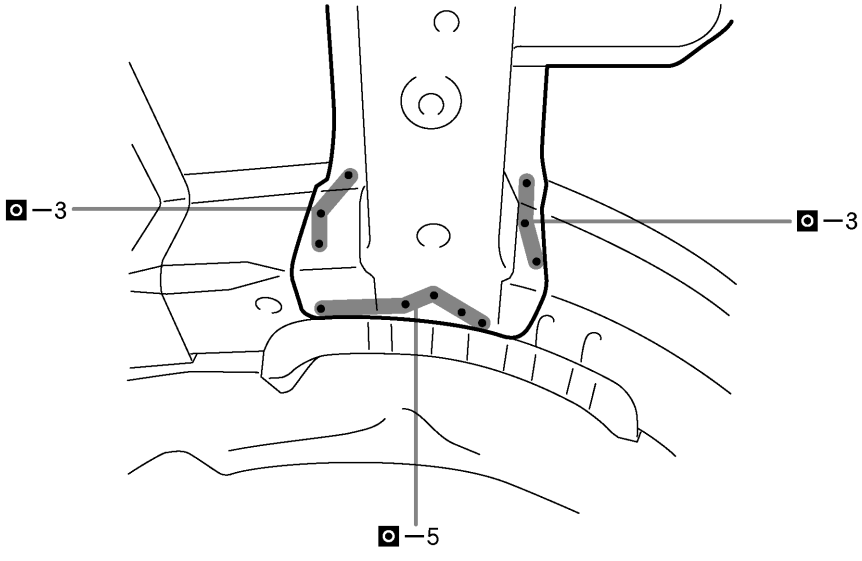

F14446

REAR FLOOR SIDE REAR MEMBER (CUT-P)

REMOVAL
With the body lower back panel removed.

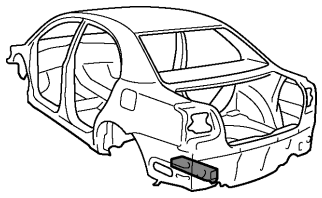

F14627-A

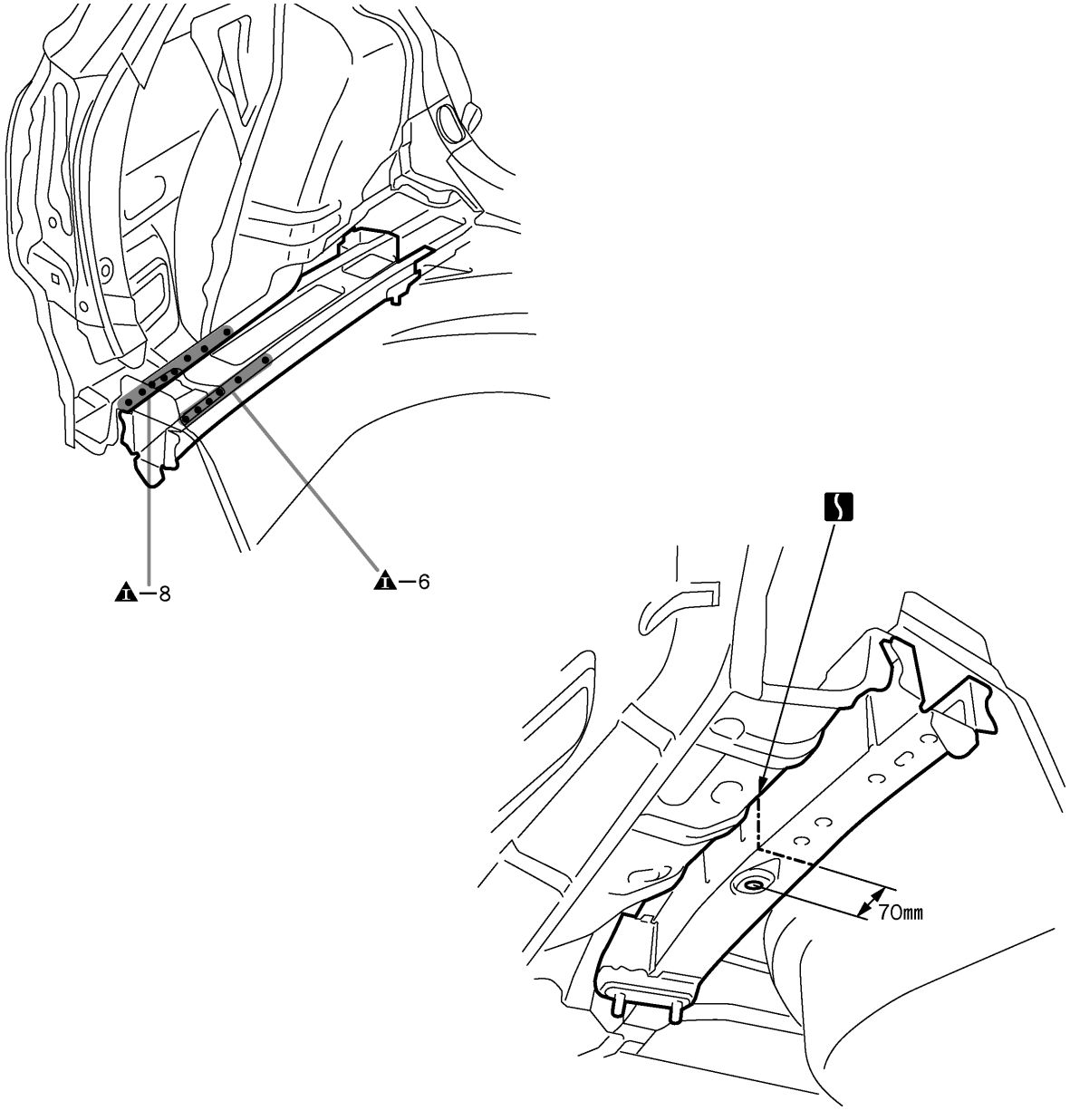

F14627

70mm (2.76in.)

INSTALLATION

- Temporarily install the new parts and measure each part of the new parts in accordance with the body dimension diagram. (See the body dimension diagram)
- Inspect the fitting of the related parts around the new parts before welding. This affects the appearance of the finish.
- After welding, apply the polyurethane foam to the corresponding parts.
- After welding, apply body sealer and under-coating to the corresponding parts.
- After applying the top coat layer, apply anti-rust agent to the inside of the necked section structural weld spots.

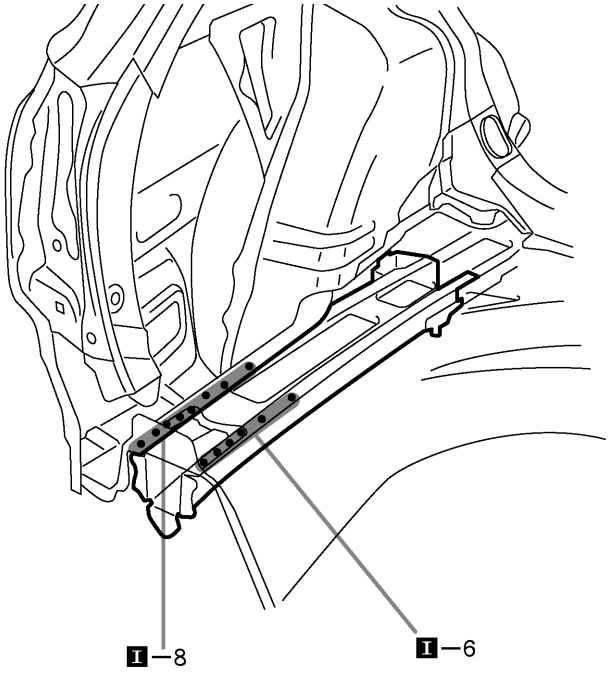

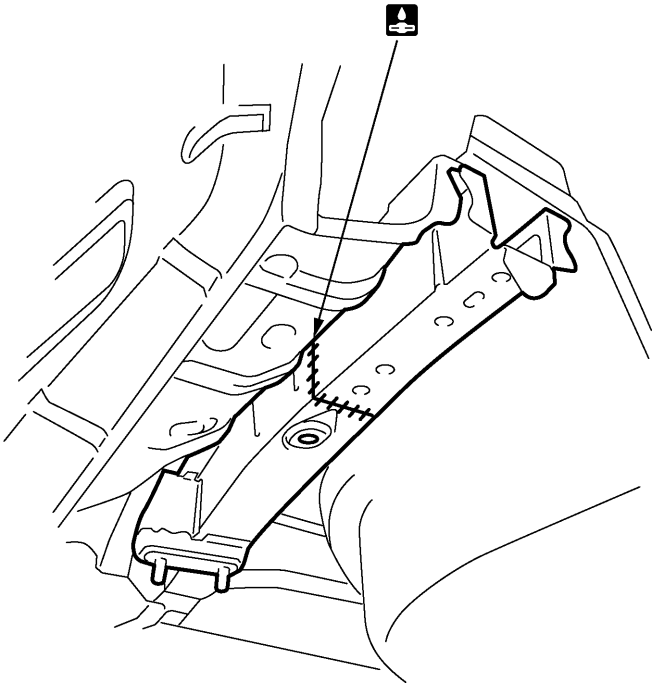

F14628

REAR FLOOR SIDE REAR MEMBER (ASSY)

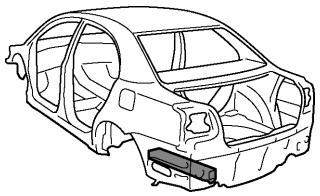

F14443-A

REMOVAL
With the body lower back panel, rear floor No.3 crossmember removed.

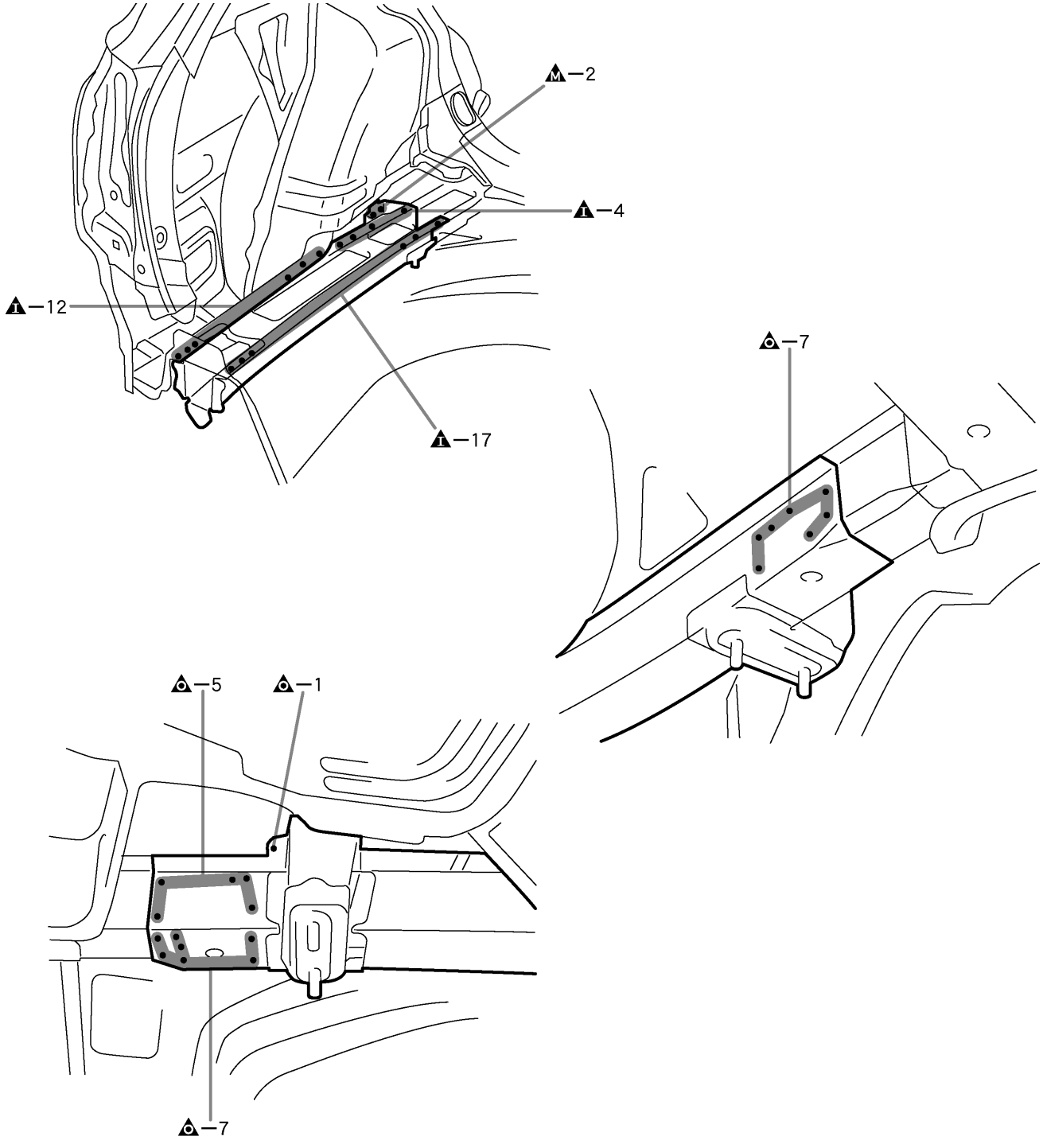

F14443

INSTALLATION

- Temporarily install the new parts and measure each part of the new parts in accordance with the body dimension diagram. (See the body dimension diagram)
- Inspect the fitting of the related parts around the new parts before welding. This affects the appearance of the finish.
- After welding, apply the polyurethane foam to the corresponding parts.
- After welding, apply body sealer and under-coating to the corresponding parts.
- After applying the top coat layer, apply anti-rust agent to the inside of the necked section structural weld spots.

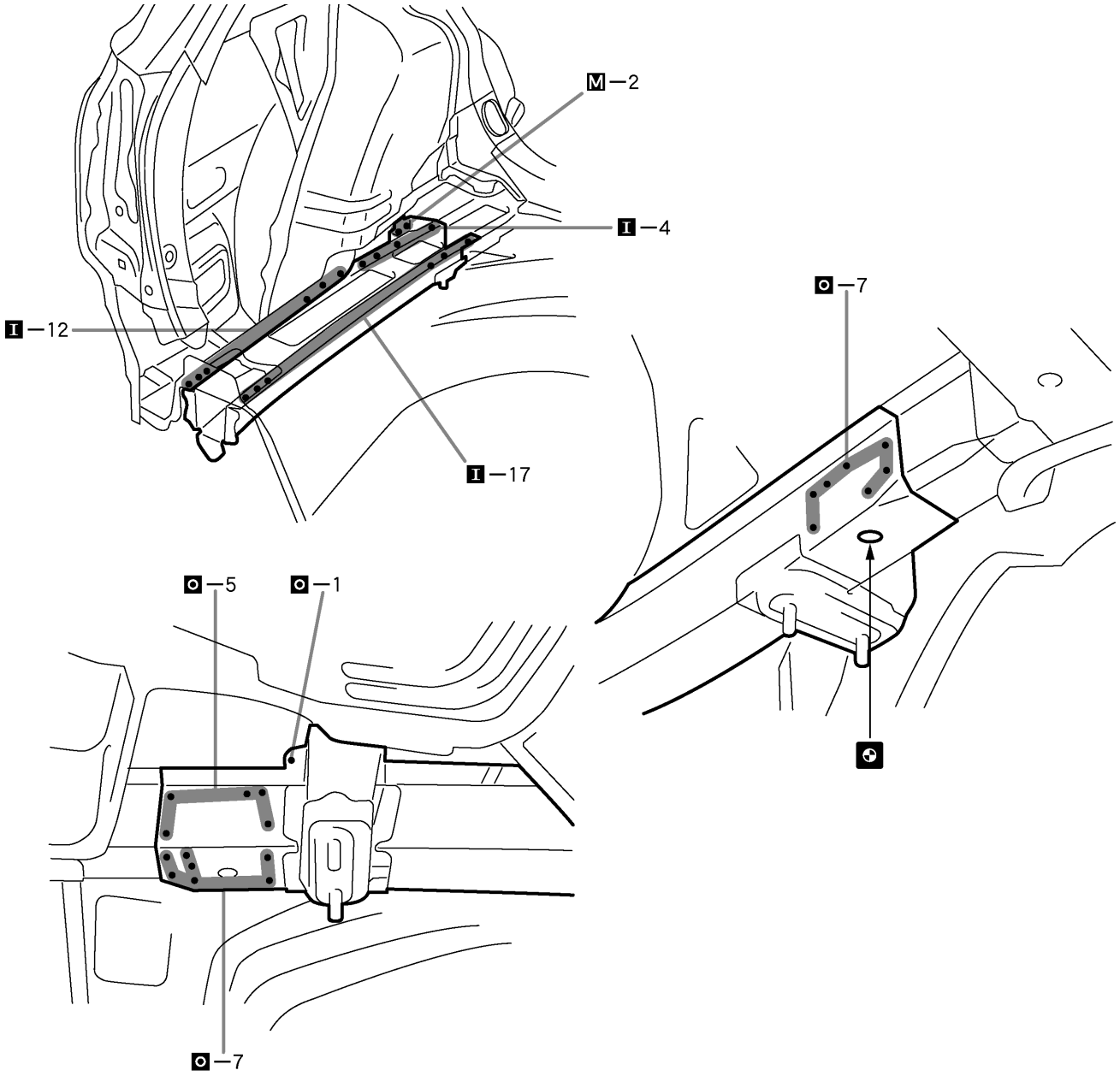

POINT

1 Determine the position of the new parts by assembly marks of the inner and outer panels.

ROOF PANEL (ASSY): Sedan w/o Sun Roof

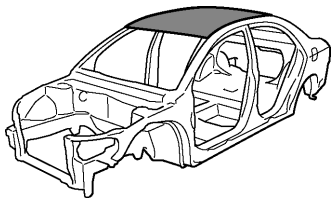

F14447-A

REMOVAL

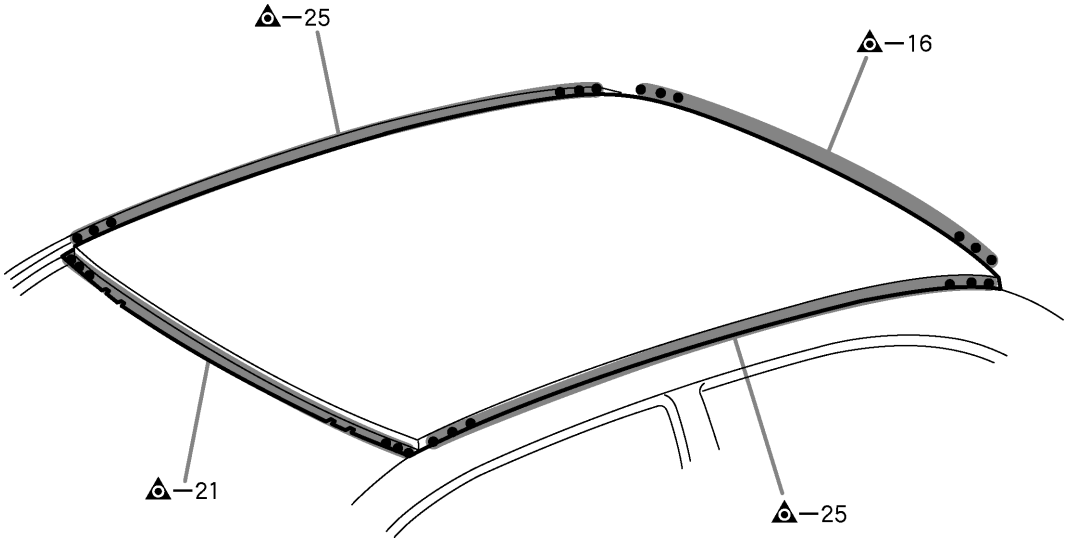

F14447

INSTALLATION

- Temporarily install the new parts and measure each part of the new parts in accordance with the body dimension diagram. (See the body dimension diagram)
- Inspect the fitting of the related parts around the new parts before welding. This affects the appearance of the finish.
- After welding, apply the polyurethane foam to the corresponding parts.
- After welding, apply body sealer and under-coating to the corresponding parts.
- After applying the top coat layer, apply anti-rust agent to the inside of the necked section structural weld spots.

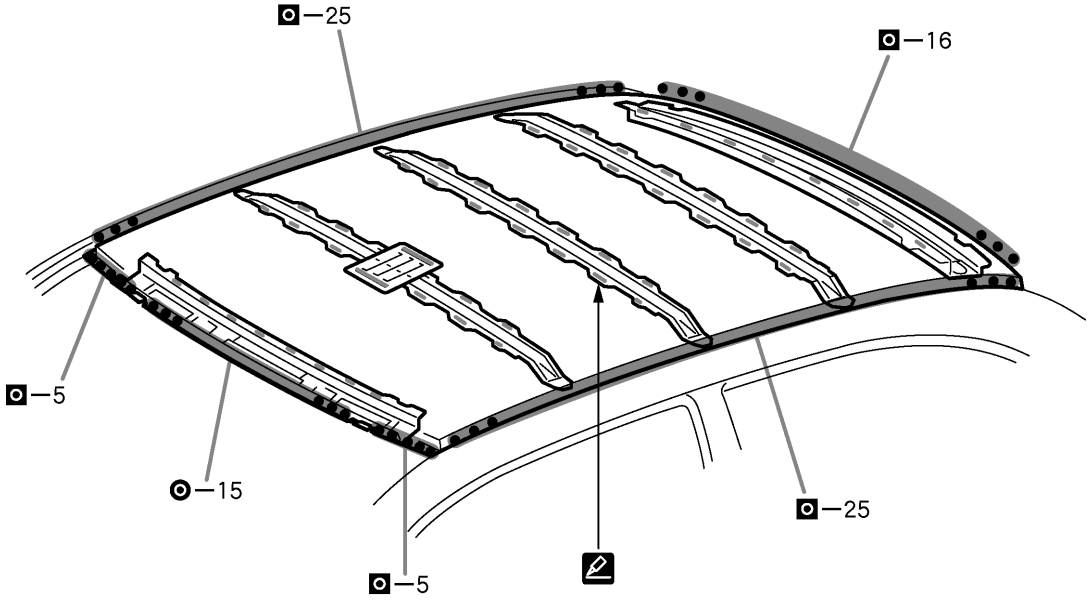

F14448

POINT

1 Before temporarily installing the new parts, apply body sealer to the windshield header panel, roof panel reinforcement and back window frame.
HINT:
1) Apply just enough sealer for the new parts to make contact.

ROOF PANEL (ASSY): Liftback w/o Sun Roof

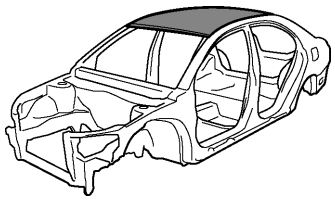

F14451-A

REMOVAL

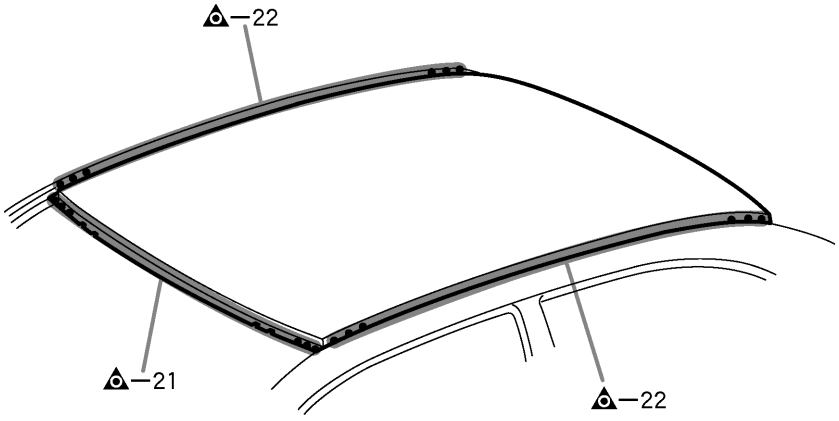

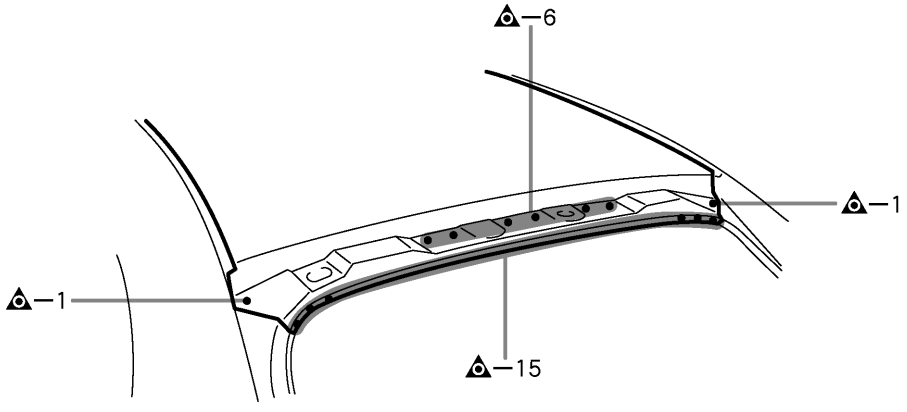

F14451

INSTALLATION

- Temporarily install the new parts and measure each part of the new parts in accordance with the body dimension diagram. (See the body dimension diagram)
- Inspect the fitting of the related parts around the new parts before welding. This affects the appearance of the finish.
- After welding, apply the polyurethane foam to the corresponding parts.
- After welding, apply body sealer and under-coating to the corresponding parts.
- After applying the top coat layer, apply anti-rust agent to the inside of the necked section structural weld spots.

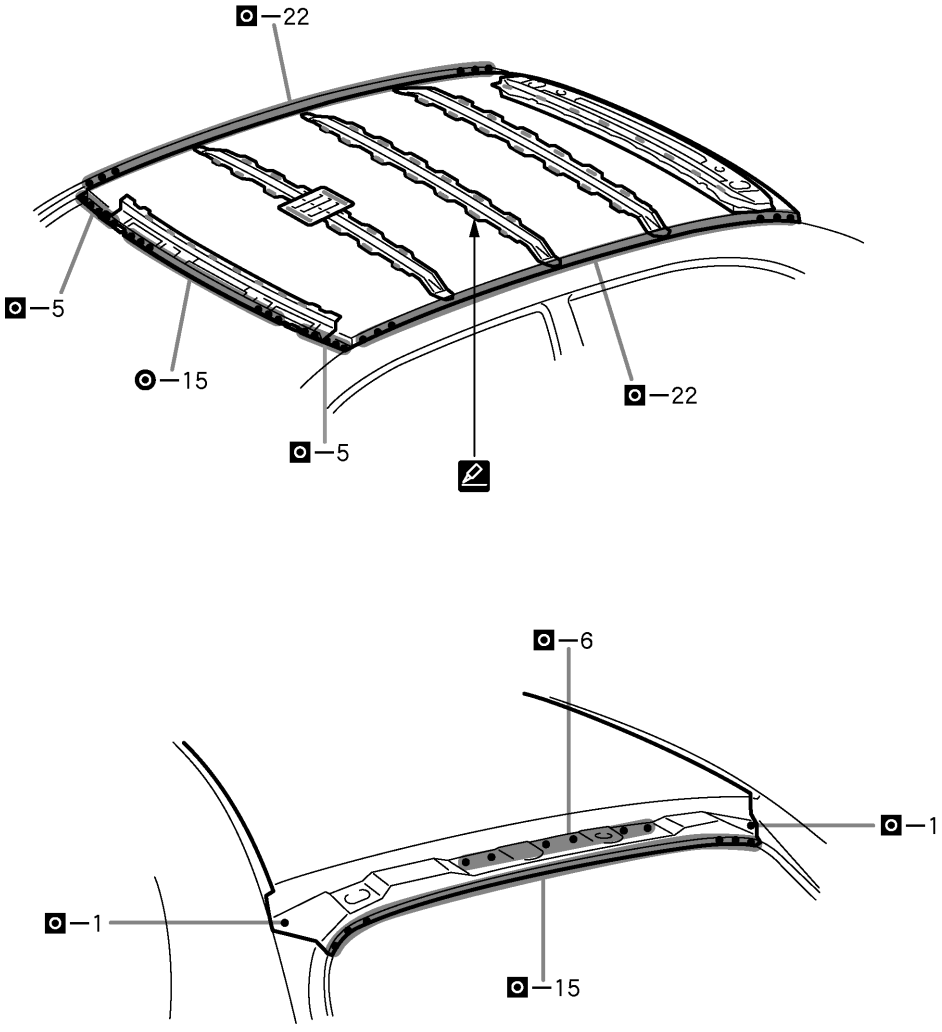

F14452

POINT

1 Before temporarily installing the new parts, apply body sealer to the windshield header panel, roof panel reinforcement and back door opening frame.
HINT:
1) Apply just enough sealer for the new parts to make contact.

ROOF PANEL (ASSY): Wagon w/o Sun Roof

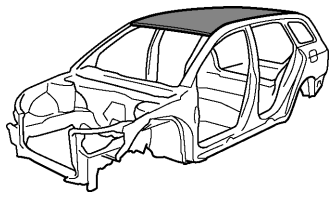

F14455-A

REMOVAL

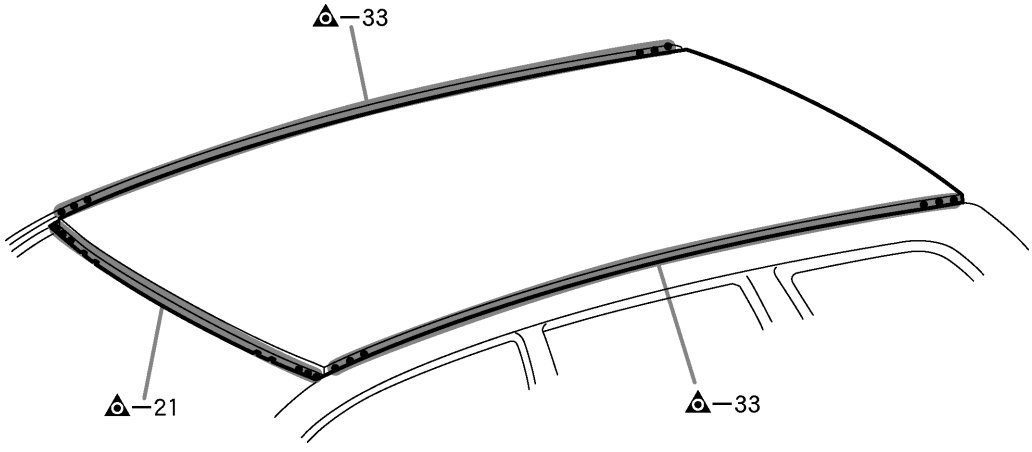

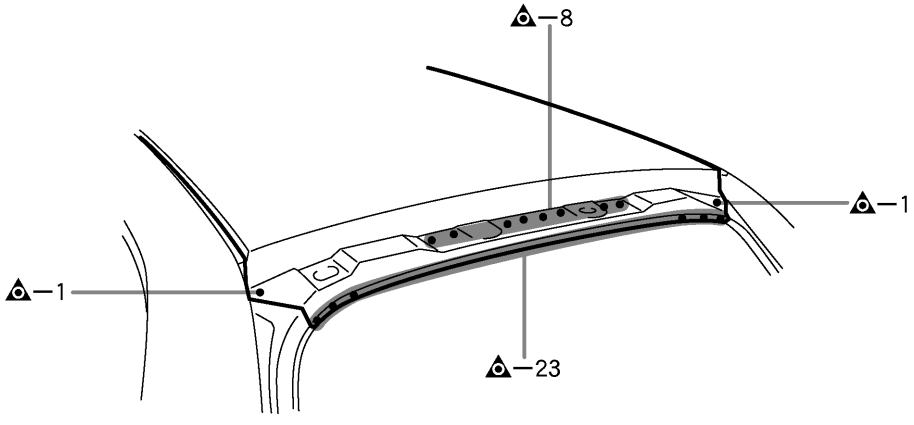

F14455

INSTALLATION

- Temporarily install the new parts and measure each part of the new parts in accordance with the body dimension diagram. (See the body dimension diagram)
- Inspect the fitting of the related parts around the new parts before welding. This affects the appearance of the finish.
- After welding, apply the polyurethane foam to the corresponding parts.
- After welding, apply body sealer and under-coating to the corresponding parts.
- After applying the top coat layer, apply anti-rust agent to the inside of the necked section structural weld spots.

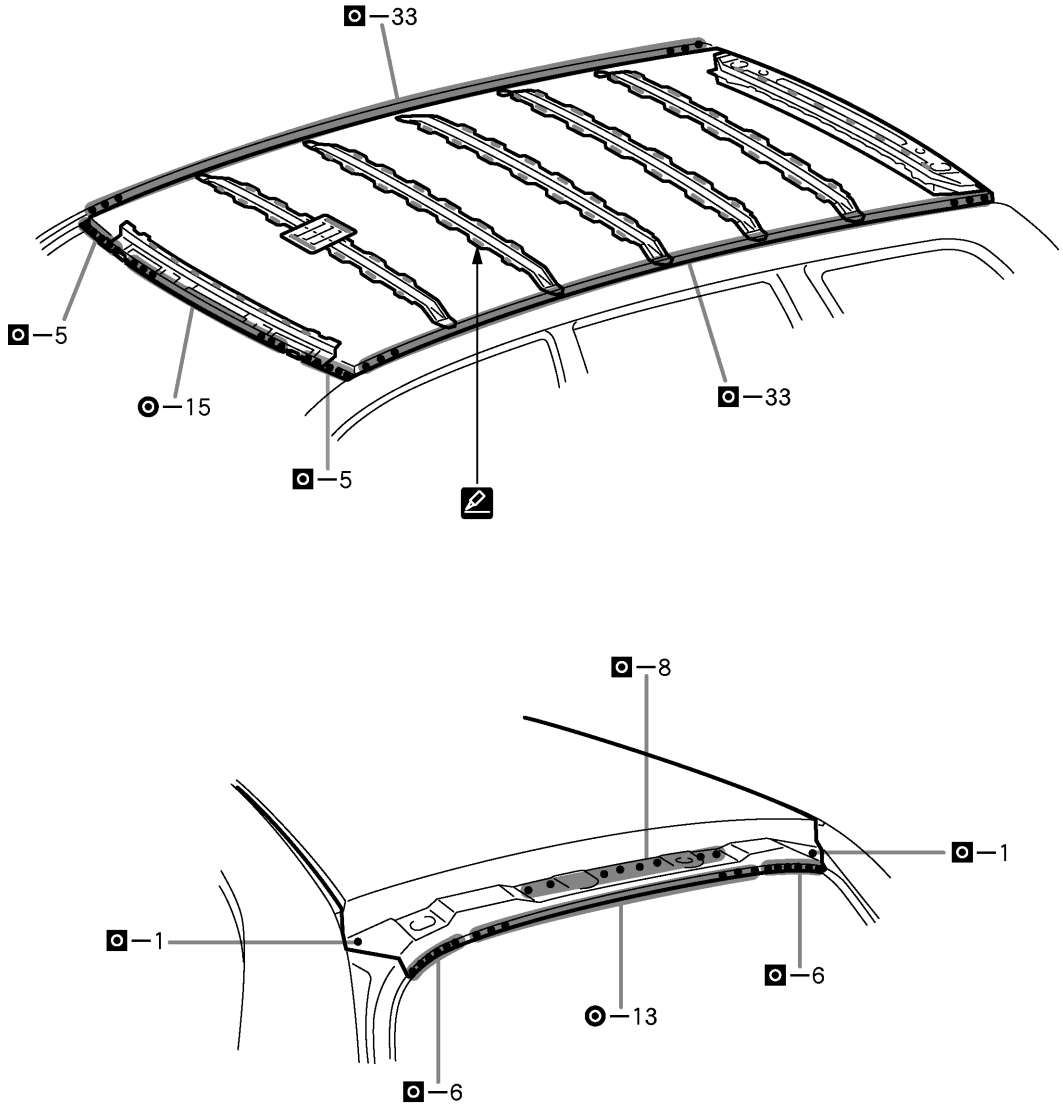

F14456

POINT

1 Before temporarily installing the new parts, apply body sealer to the windshield header panel, roof panel reinforcement and back door opening frame.
HINT:
1) Apply just enough sealer for the new parts to make contact.

ROOF PANEL (ASSY): Sedan w/ Sun Roof

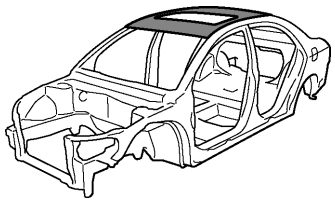

F14449-A

REMOVAL

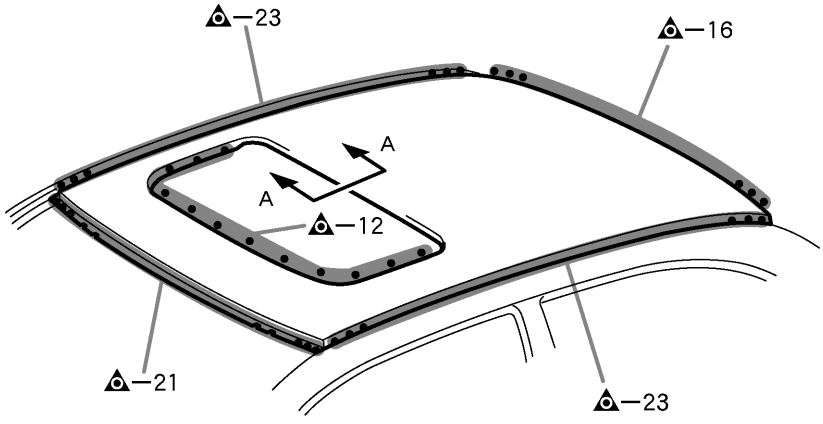

A − A

[If reusing the roof panel reinforcement]

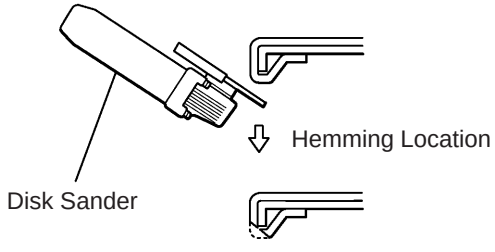

F14449

INSTALLATION

- Temporarily install the new parts and measure each part of the new parts in accordance with the body dimension diagram. (See the body dimension diagram)
- Inspect the fitting of the related parts around the new parts before welding. This affects the appearance of the finish.
- After welding, apply the polyurethane foam to the corresponding parts.
- After welding, apply body sealer and under-coating to the corresponding parts.
- After applying the top coat layer, apply anti-rust agent to the inside of the necked section structural weld spots.

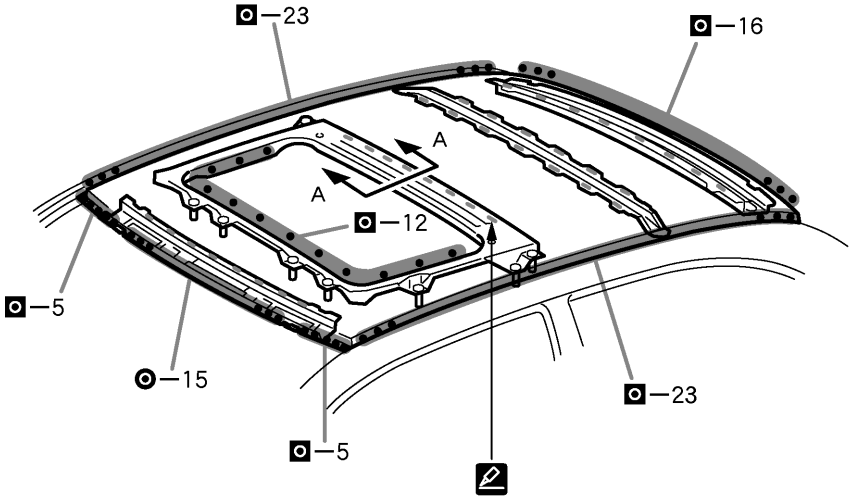

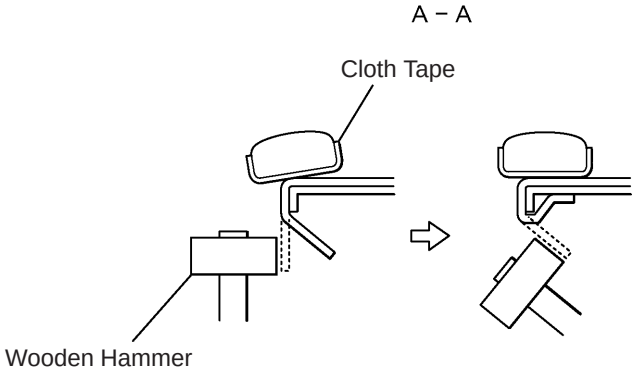

F14450

POINT

1 Before temporarily installing the new parts, apply body sealer to the windshield header panel, roof panel reinforcement and back window frame.
HINT:
1) Apply just enough sealer for the new parts to make contact.

2 Bend the flange hem with a wooden hammer and dolly.
HINT
1) Perform hemming three steps, being careful not to warp the panel.

ROOF PANEL (ASSY): Liftback w/ Sun Roof

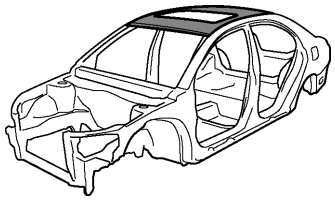

F14453-A

REMOVAL

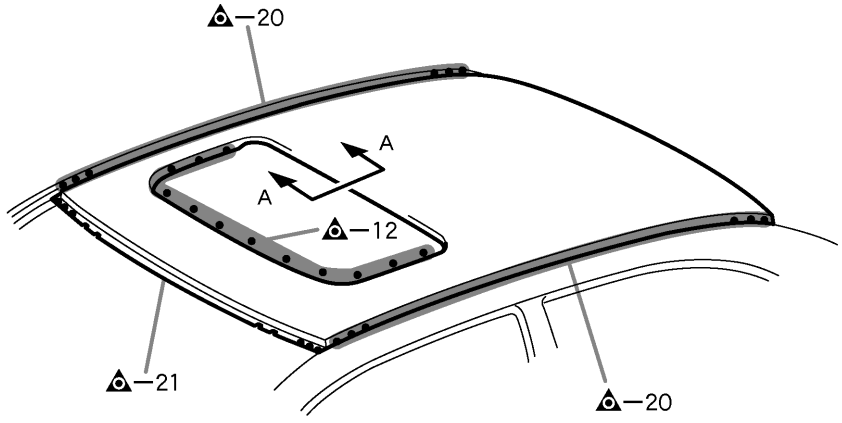

A - A

[If reusing the roof panel reinforcement]

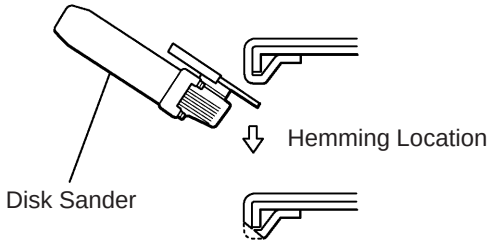

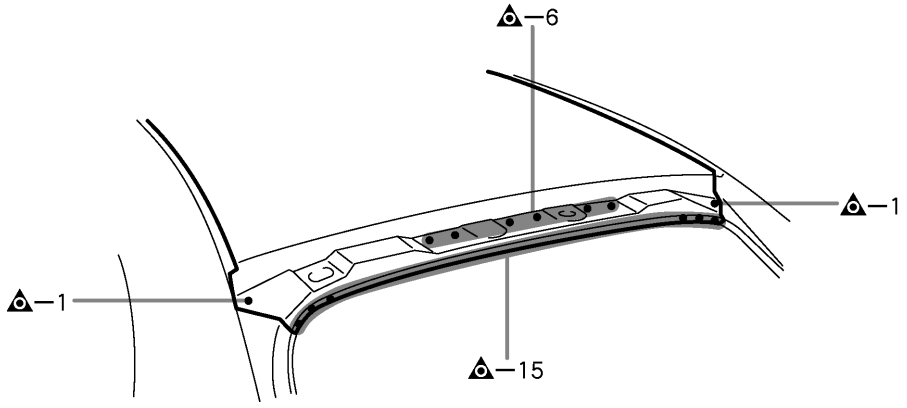

F14453

INSTALLATION

- Temporarily install the new parts and measure each part of the new parts in accordance with the body dimension diagram. (See the body dimension diagram)
- Inspect the fitting of the related parts around the new parts before welding. This affects the appearance of the finish.
- After welding, apply the polyurethane foam to the corresponding parts.
- After welding, apply body sealer and under-coating to the corresponding parts.
- After applying the top coat layer, apply anti-rust agent to the inside of the necked section structural weld spots.

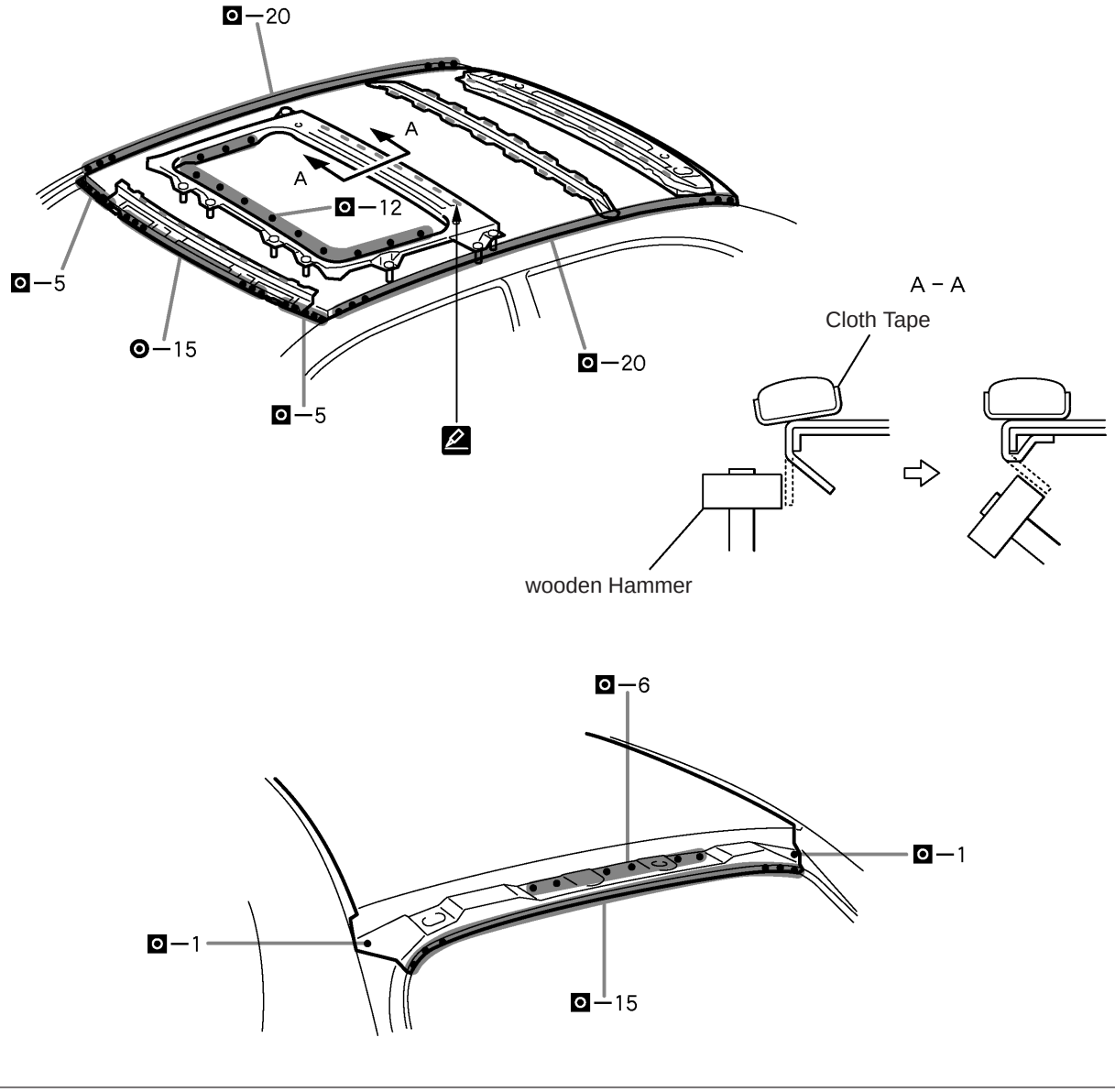

POINT

1 Before temporarily installing the new parts, apply body sealer to the windshield header panel, roof panel reinforcement and back door opening frame.
HINT:
1) Apply just enough sealer for the new parts to make contact.

2 Bend the flange hem with a wooden hammer and dolly.
HINT
1) Perform hemming three steps, being careful not to warp the panel.

ROOF PANEL (ASSY): Wagon w/ Sun Roof

REMOVAL

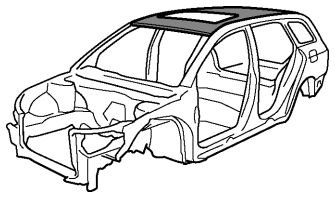

F14457-A

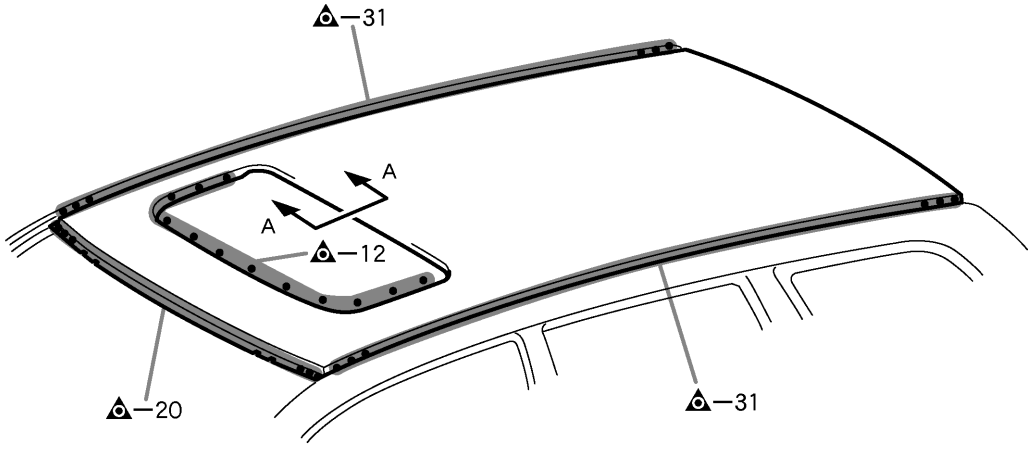

A – A

[If reusing the roof panel reinforcement]

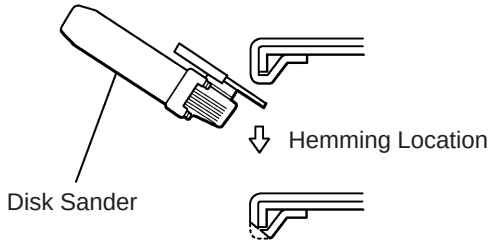

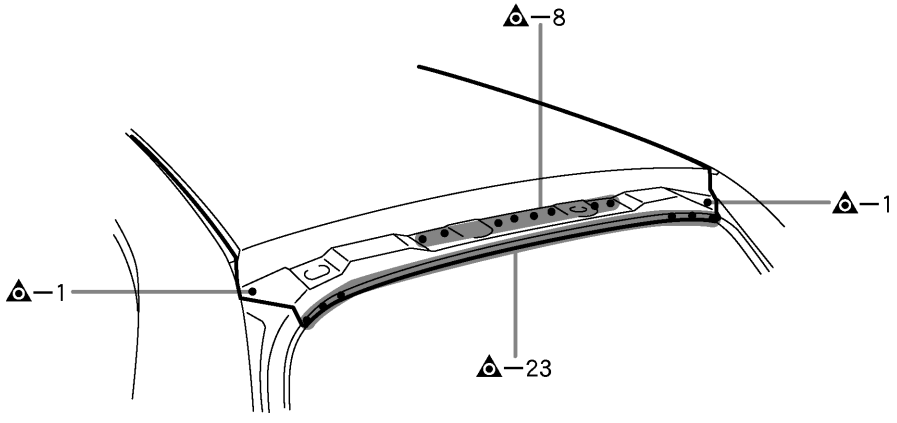

F14457

INSTALLATION

- Temporarily install the new parts and measure each part of the new parts in accordance with the body dimension diagram. (See the body dimension diagram)
- Inspect the fitting of the related parts around the new parts before welding. This affects the appearance of the finish.
- After welding, apply the polyurethane foam to the corresponding parts.
- After welding, apply body sealer and under-coating to the corresponding parts.
- After applying the top coat layer, apply anti-rust agent to the inside of the necked section structural weld spots.

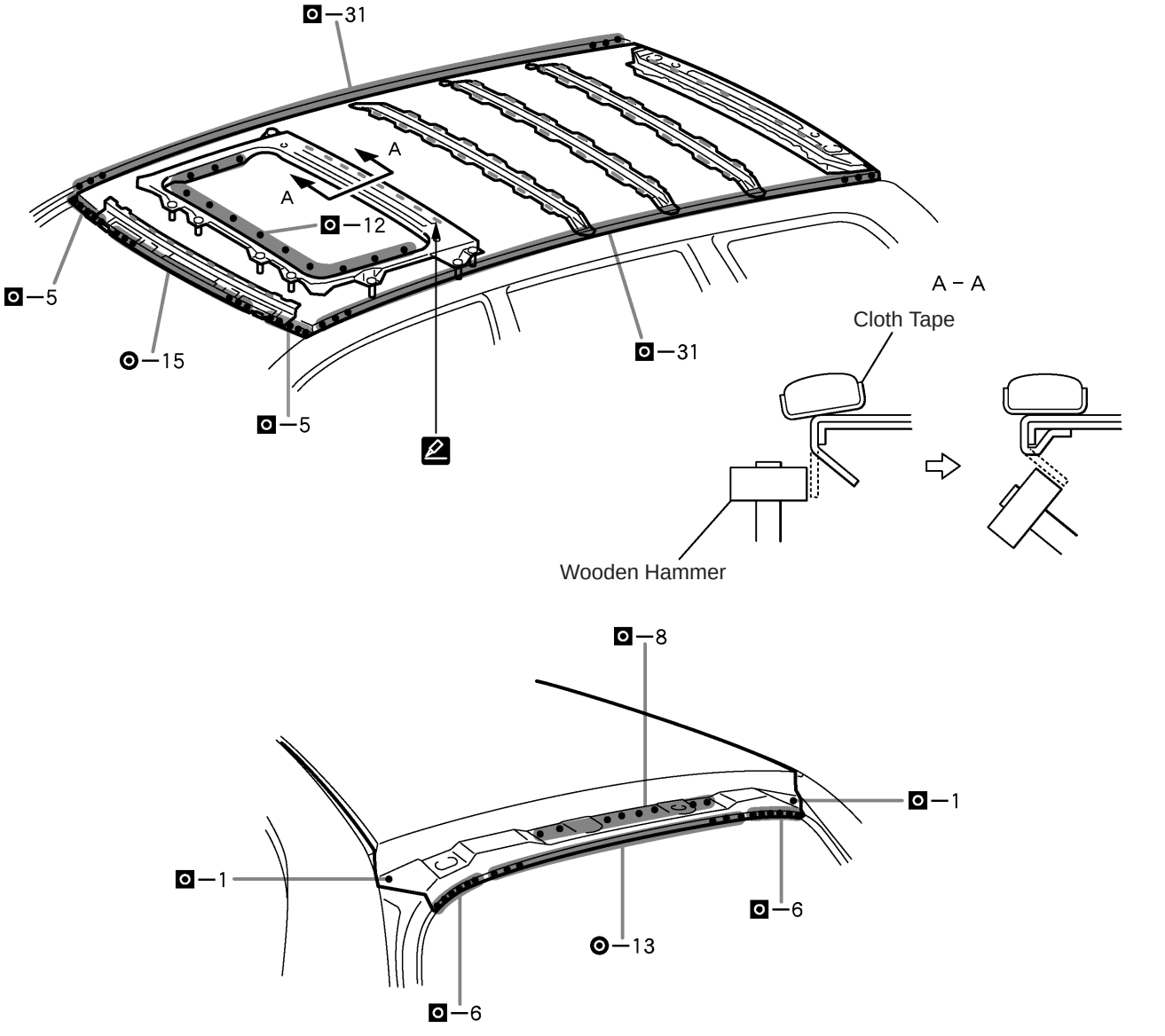

POINT

1 Before temporarily installing the new parts, apply body sealer to the windshield header panel, roof panel reinforcement and back door opening frame.
HINT:
1) Apply just enough sealer for the new parts to make contact.

2 Bend the flange hem with a wooden hammer and dolly.
HINT
1) Perform hemming three steps, being careful not to warp the panel.

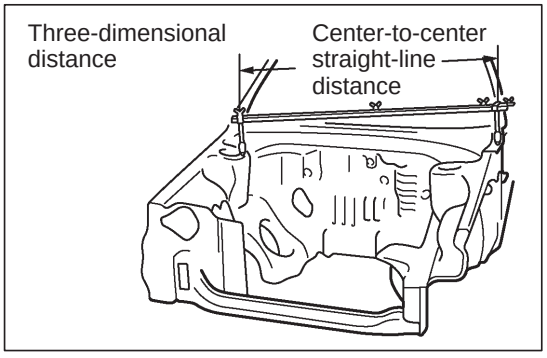

GENERAL INFORMATION

1. BASIC DIMENSIONS

(a) There are two types of dimensions in the diagram.

(1) (Three-dimensional distance)

- Straight-line distance between the centers of two measuring points.

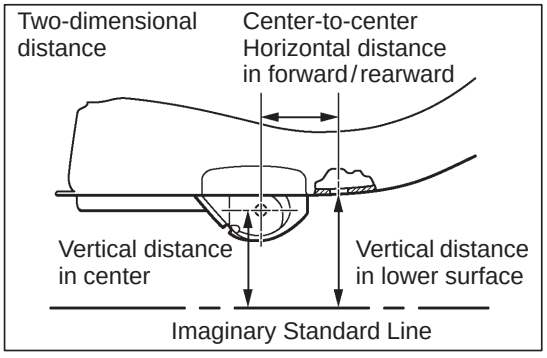

(2) (Two-dimensional distance)

- Horizontal distance in forward/rearward between the centers of two measuring points.
- The height from an imaginary standard line.

(b) In cases in which only one dimension is given, left and right are symmetrical.

(c) The dimensions in the following drawing indicate actual distance. Therefore, please use the dimensions as a reference.

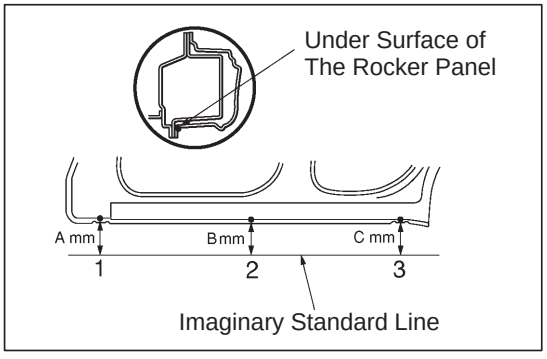

(d) The line that connects the places listed below is the imaginary standard line when measuring the height. (The dimensions are printed in the text.)

SYMBOL	Name
1	The place that was lowered A mm from the under surface of the rocker panel centered on the front jack up point.
2	The place that was lowered B mm from the under surface of the rocker panel centered between 1 and 3.
3	The place that was lowered C mm from the under surface of the rocker panel centered on the rear jack up point.

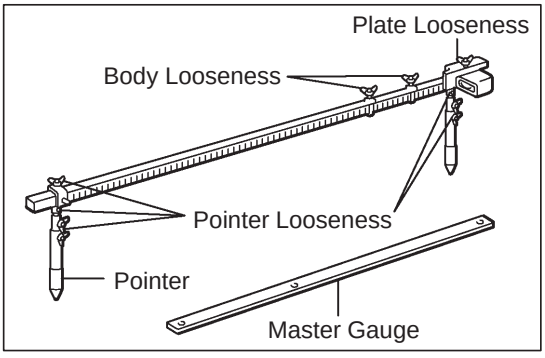

2. MEASURING

(a) Basically, all measurements are to be done with a tracking gauge. For portions where it is not possible to use a tracking gauge, a tape measure should be used.

(b) Use only a tracking gauge that has no looseness in the body, measuring plate, or pointers.

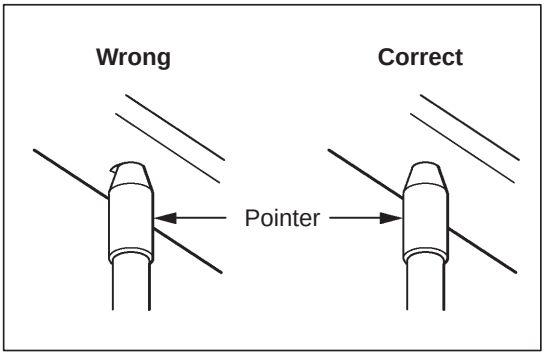

HINT:

1) The height of the left and right pointers must be equal.
2) Always calibrate the tracking gauge before measuring or after adjusting the pointer height.
3) Take care not to drop the tracking gauge or otherwise shock it.
4) Confirm that the pointers are securely in the holes.

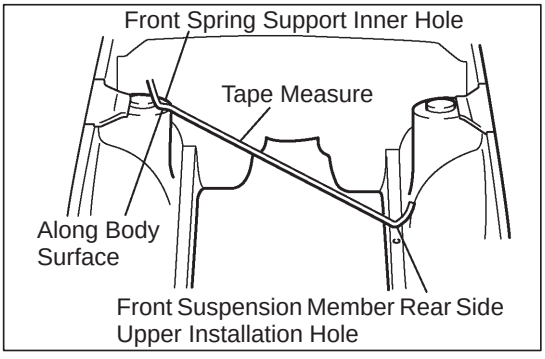

(c) When using a tape measure, avoid twists and bends in the tape.

(d) When tracking a diagonal measurement from the front spring support inner hole to the suspension member upper rear installation hole, measure along the front spring support panel surface.

BODY DIMENSION DRAWINGS

ENGINE COMPARTMENT

(Three-Dimensional Distance)

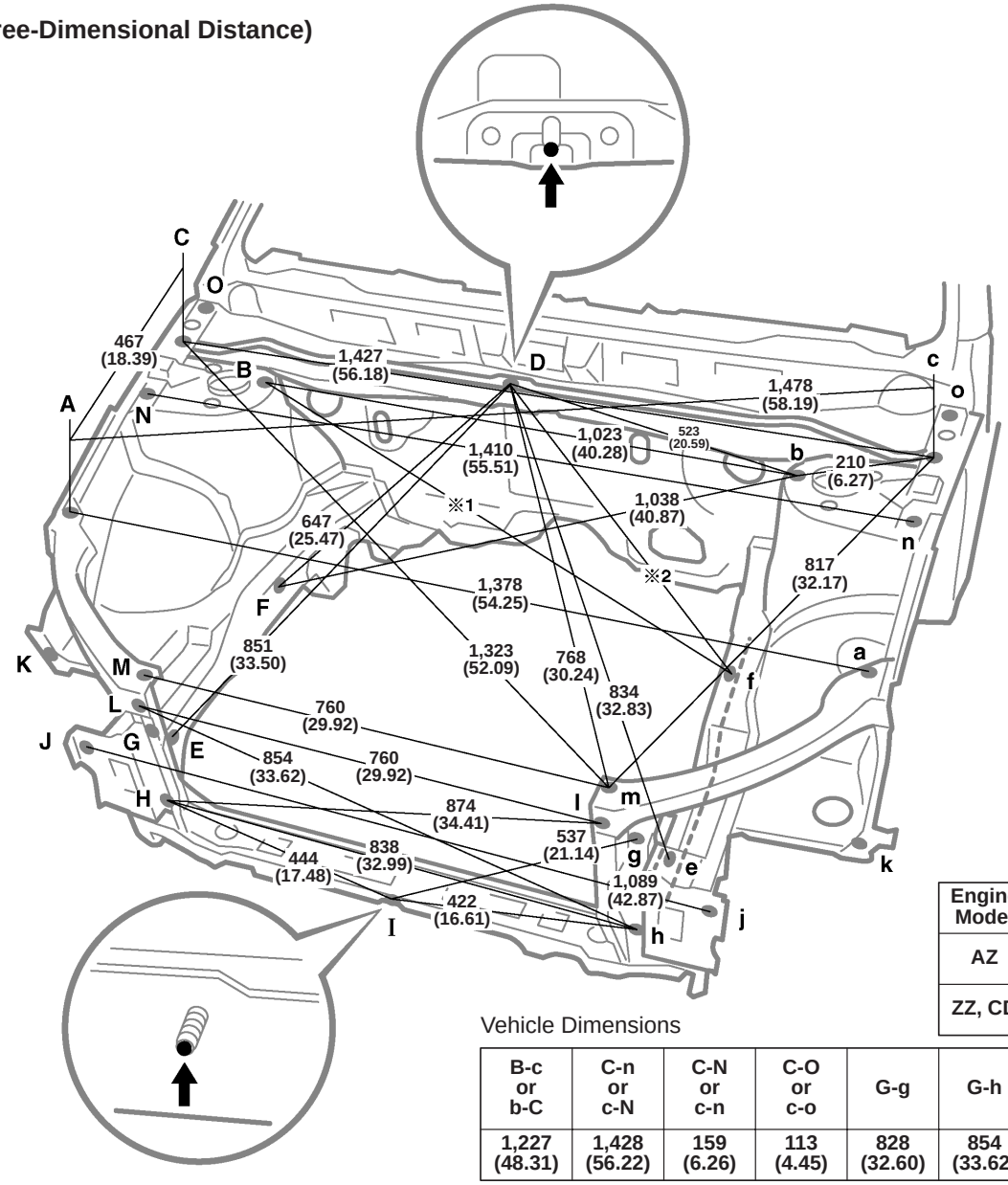

Engine Model	※1	※2
AZ	1,022 (40.24)	625 (24.61)
ZZ, CD	1,010 (39.76)	606 (23.86)

Vehicle Dimensions

B-c or b-C	C-n or c-N	C-N or c-n	C-O or c-o	G-g	G-h	g-H
1,227 (48.31)	1,428 (56.22)	159 (6.26)	113 (4.45)	828 (32.60)	854 (33.62)	876 (34.49)

I-j	I-J	J-L	j-l	K-k	N-o or n-O	N-O or n-o
593 (23.35)	607 (23.90)	250 (9.84)	240 (9.45)	1,439 (56.65)	1,452 (57.17)	272 (10.71)

mm (in.)

Symbol	Name	Hole dia.	Symbol	Name	Hole dia.
A, a	Front fender installation nut	6 (0.24) nut	I	Hood lock brace installation bolt	6 (0.24) bolt
B, b	Front spring support hole-inner	11 (0.43)	J, j	Front side member rear plate standard hole	13 (0.51)
C, c	Front fender installation nut	6 (0.24) nut	K, k	Front fender extention standard hole	7 (0.28)
D	Cowl top inner panel standard hole	—	L, l	Radiator upper support installation nut	6 (0.24) nut
E, e	Front side member standard hole	18 (0.71)	M, m	Radiator upper support installation nut	6 (0.24) nut
F	Front side member standard hole	12 (0.47)	N, n	Front apron to cowl side upper member standard hole	10 (0.39)
f	Engine mounting installation nut	10 (0.39) nut			
G, g	Radiator support standard hole	10 (0.39)	O, o	Hood hinge installation nut	8 (0.31) nut
H, h	Front crossmember side gusset standard hole	10 (0.39)	—	—	—

BODY OPENING AREAS (Side View: Front)
All

(Three-Dimensional Distance)

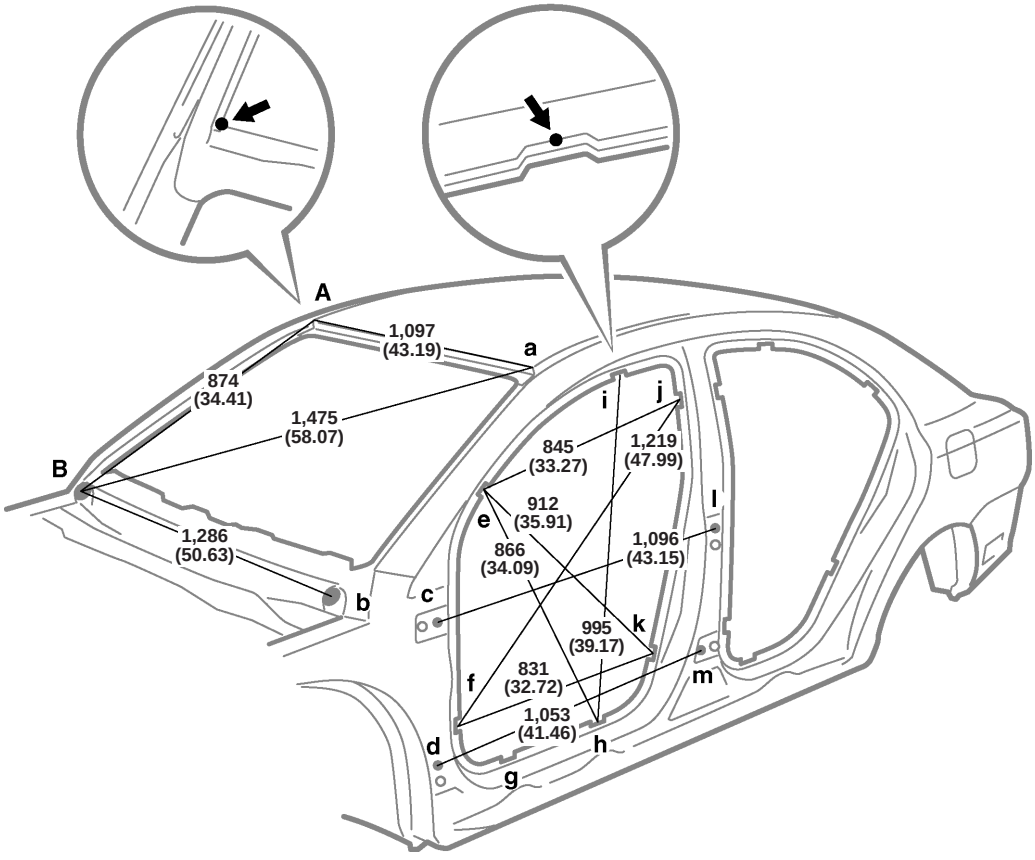

Vehicle Dimensions Left ↔ Right

E-e	F-f	G-g	H-h	I-i	J-j	K-k
1,323 (52.09)	1,411 (55.55)	1,419 (55.87)	1,419 (55.87)	1,157 (45.55)	1,265 (49.80)	1,420 (55.91)

E-f or e-F	E-h or e-H	E-j or e-J	F-j or f-J	F-k or f-K	H-i or h-I	J-k or j-K
1,493 (58.78)	1,621 (63.82)	1,545 (60.83)	1,808 (71.18)	1,641 (64.61)	1,622 (63.86)	1,540 (60.63)

mm (in.)

Symbol	Name	Hole dia.	Symbol	Name	Hole dia.
A, a	Roof panel corner	—	H, h	Rocker panel assembly mark	—
B, b	Wiper link installation nut	6 (0.24) nut	I, i	Roof side rail assembly mark	—
C, c	Front door hinge installation nut	8 (0.31) nut	J, j	Center body pillar assembly mark	—
D, d	Front door hinge installation nut	8 (0.31) nut	K, k	Center body pillar assembly mark	—
E, e	Front body pillar assembly mark	—	L, l	Rear door hinge installation nut	8 (0.31) nut
F, f	Front body pillar assembly mark	—	M, m	Rear door hinge installation nut	8 (0.31) nut
G, g	Rocker panel assembly mark	—	—	—	—

BODY OPENING AREAS (Side View: Rear)
Sedan, Liftback

(Three-Dimensional Distance)

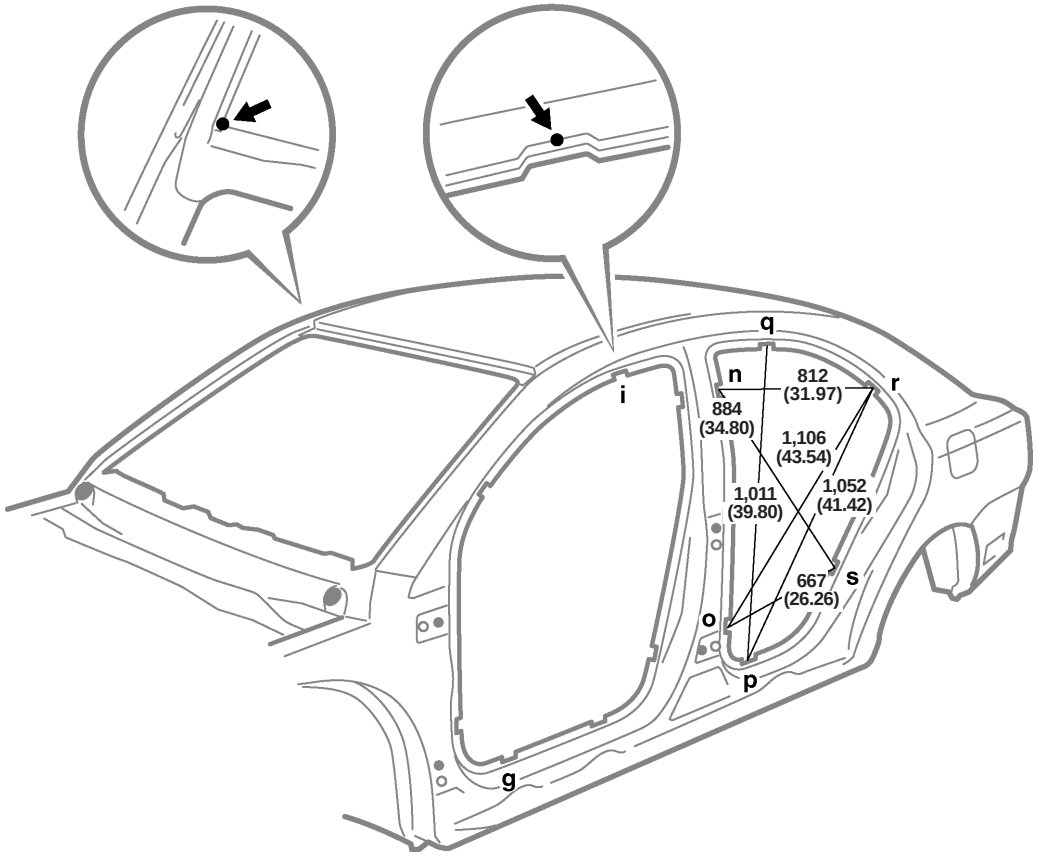

Vehicle Dimensions Left ↔ Right

N-n	O-o	P-p	Q-q	R-r	S-s
1,267 (49.88)	1,420 (55.91)	1,419 (55.87)	1,151 (45.31)	1,309 (51.54)	1,409 (55.47)

G-p or g-P	I-q or i-Q	N-r or n-R	N-s or n-S	O-s or o-S	P-q or p-Q	R-s or r-S
1,759 (69.25)	1,338 (52.68)	1,522 (59.92)	1,602 (63.07)	1,564 (61.57)	1,630 (64.17)	1,496 (58.90)

mm (in.)

Symbol	Name	Hole dia.	Symbol	Name	Hole dia.
G, g	Rocker panel assembly mark	—	P, p	Rocker panel assembly mark	—
I, i	Roof side rail assembly mark	—	Q, q	Roof side rail assembly mark	—
N, n	Center body pillar assembly mark	—	R, r	Quarter panel assembly mark	—
O, o	Center body pillar assembly mark	—	S, s	Quarter panel assembly mark	—

BODY OPENING AREAS (Side View: Rear)
Wagon

(Three-Dimensional Distance)

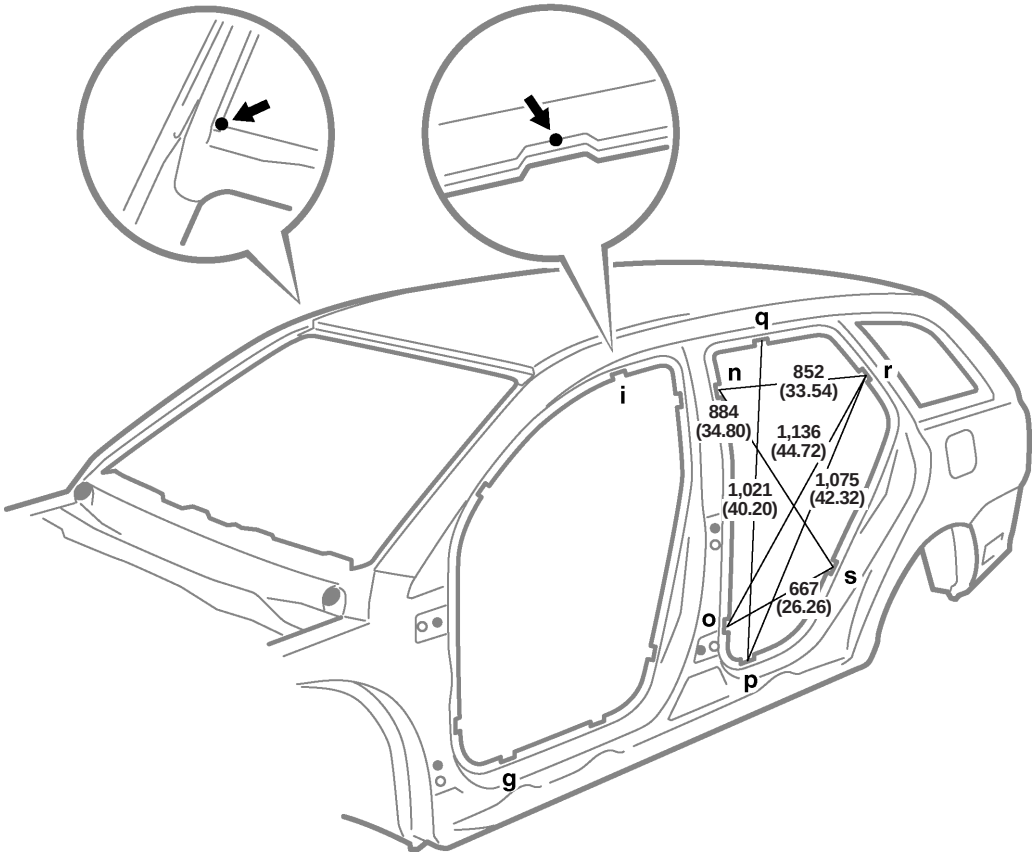

Vehicle Dimensions Left ↔ Right

N-n	O-o	P-p	Q-q	R-r	S-s
1,267 (49.88)	1,420 (55.91)	1,419 (55.87)	1,140 (44.88)	1,311 (51.61)	1,409 (55.47)

G-p or g-P	I-q or i-Q	N-r or n-R	N-s or n-S	O-s or o-S	P-q or p-Q	R-s or r-S
1,759 (69.25)	1,333 (52.48)	1,545 (60.83)	1,602 (63.07)	1,564 (61.57)	1,631 (64.21)	1,502 (59.13)

mm (in.)

Symbol	Name	Hole dia.	Symbol	Name	Hole dia.
G, g	Rocker panel assembly mark	—	P, p	Rocker panel assembly mark	—
I, i	Roof side rail assembly mark	—	Q, q	Roof side rail assembly mark	—
N, n	Center body pillar assembly mark	—	R, r	Quarter panel assembly mark	—
O, o	Center body pillar assembly mark	—	S, s	Quarter panel assembly mark	—

BODY OPENING AREAS (Rear View)
Sedan

(Three-Dimensional Distance)

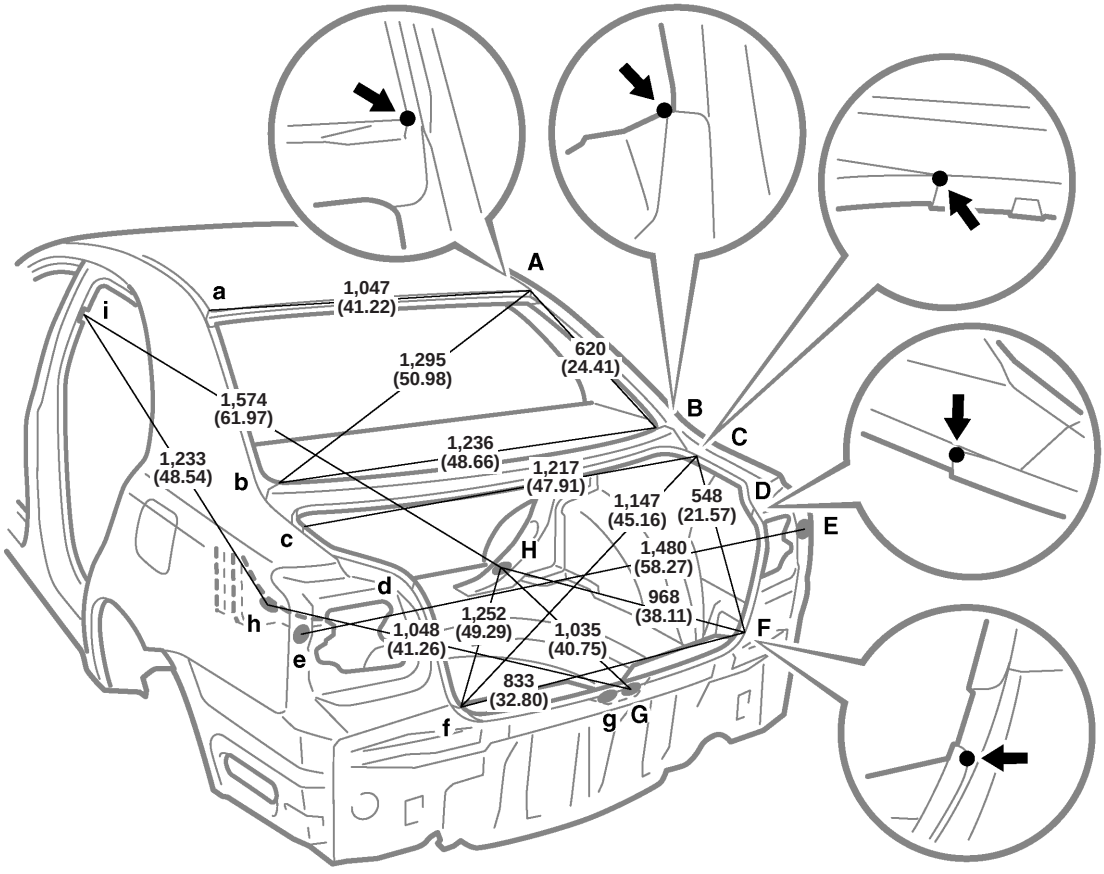

Vehicle Dimensions Left ↔ Right

D-d	H-h
1,084 (42.68)	754 (29.69)

mm (in.)

Symbol	Name	Hole dia.	Symbol	Name	Hole dia.
A, a	Roof panel corner	—	E, e	Quarter panel standard hole	10 (0.39)
B, b	Upper back reinforcement / Quarter panel adjoining portion	—	F, f	Body lower back panel reinforcement / Quarter panel end housing adjoining portion	—
C, c	Quarter panel / Upper back reinforcement adjoining portion	—	G, g	Back door lock striker installation nut	8 (0.31) nut
			H, h	Deck hook installation nut	6 (0.24) nut
D, d	Quarter panel end housing / Luggage compartment opening trough adjoining portion	—	I, i	Center body pillar assembly mark	—
			—	—	—

BODY OPENING AREAS (Rear View)
Liftback

(Three-Dimensional Distance)

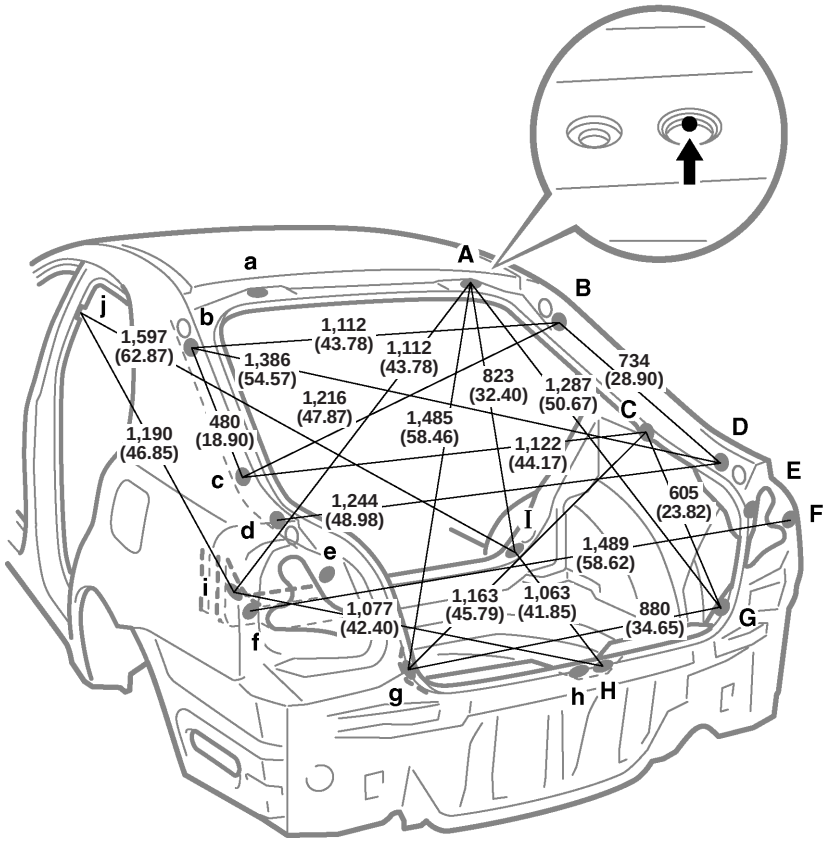

Vehicle Dimensions Left ↔ Right

E-e	G-i or g-I	G-I or g-i	I-i
1,165 (45.87)	1,290 (50.79)	937 (36.89)	896 (35.28)

mm (in.)

Symbol	Name	Hole dia.	Symbol	Name	Hole dia.
A, a	Back door hinge installation hole-outer	12 (0.47)	F, f	Quarter panel standard hole	10 (0.39)
B, b	Back door damper stay installation nut	6 (0.24) nut	G, g	Deck side rear garnish installation hole	8.5 (0.335)
C, c	Luggage compartment trim side cover installation hole	8.5 (0.335)	H, h	Back door lock striker installation nut	8 (0.31) nut
			I, i	Deck hook installation nut	6 (0.24) nut
D, d	Back door stopper installation nut	5 (0.20) nut	J, j	Center body pillar assembly mark	—
E, e	Quarter panel end housing standard hole	10 (0.39)	—	—	—

BODY OPENING AREAS (Rear View)
Wagon

(Three-Dimensional Distance)

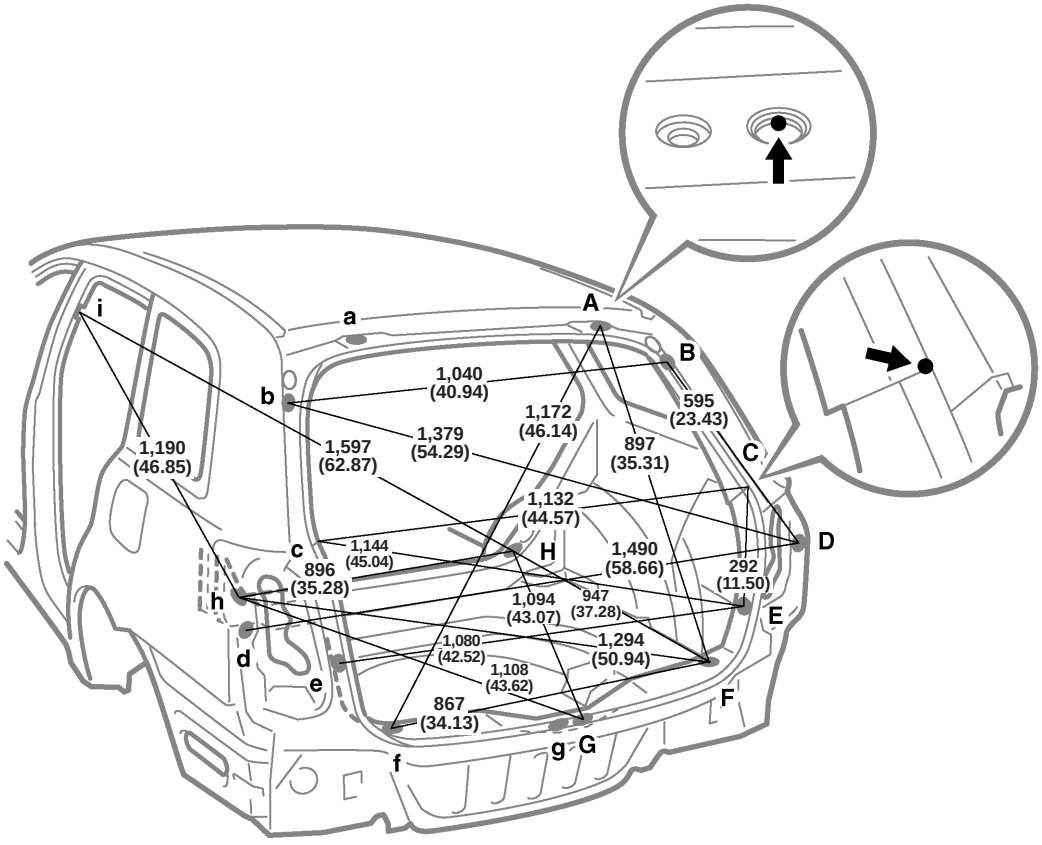

mm (in.)

Symbol	Name	Hole dia.	Symbol	Name	Hole dia.
A, a	Back door hinge installation hole	12 (0.47)	E, e	Deck side rear garnish installation hole	8.5 (0.335)
B, b	Back door damper stay installation nut	6 (0.24) nut	F, f	Deck side rear garnish installation hole	7 (0.28)
C, c	Roof side inner panel / Roof side inner lower panel adjoining portion	—	G, g	Back door lock striker installation nut	8 (0.31) nut
			H, h	Deck hook installation nut	6 (0.24) nut
D, d	Quarter panel standard hole	10 (0.39)	I, i	Center body pillar assembly mark	—

UNDER BODY

(Three-Dimensional Distance)

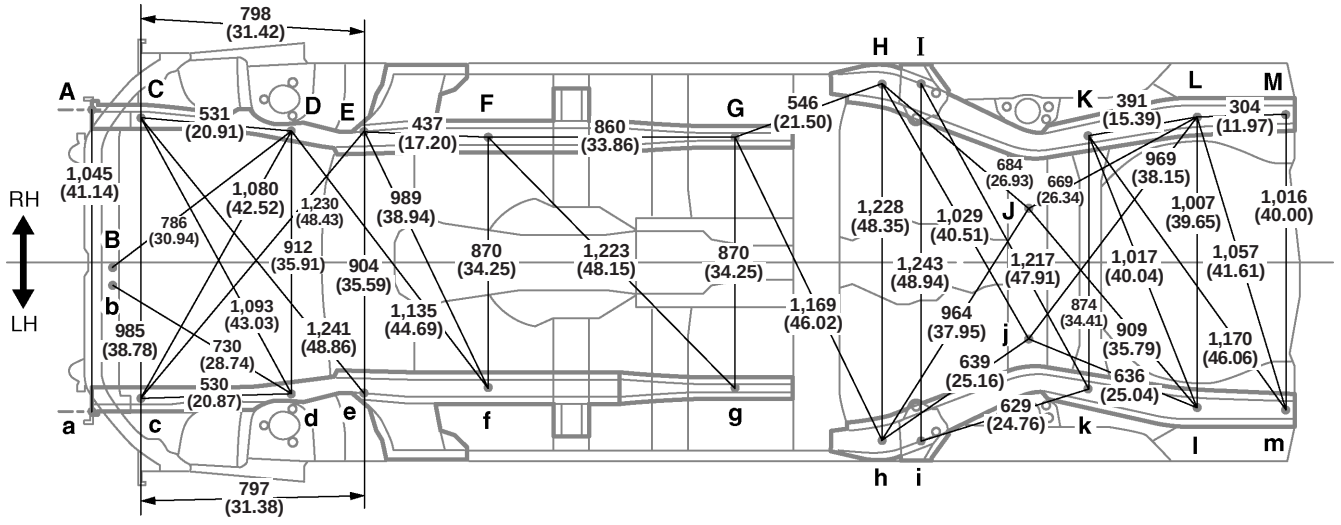

Front

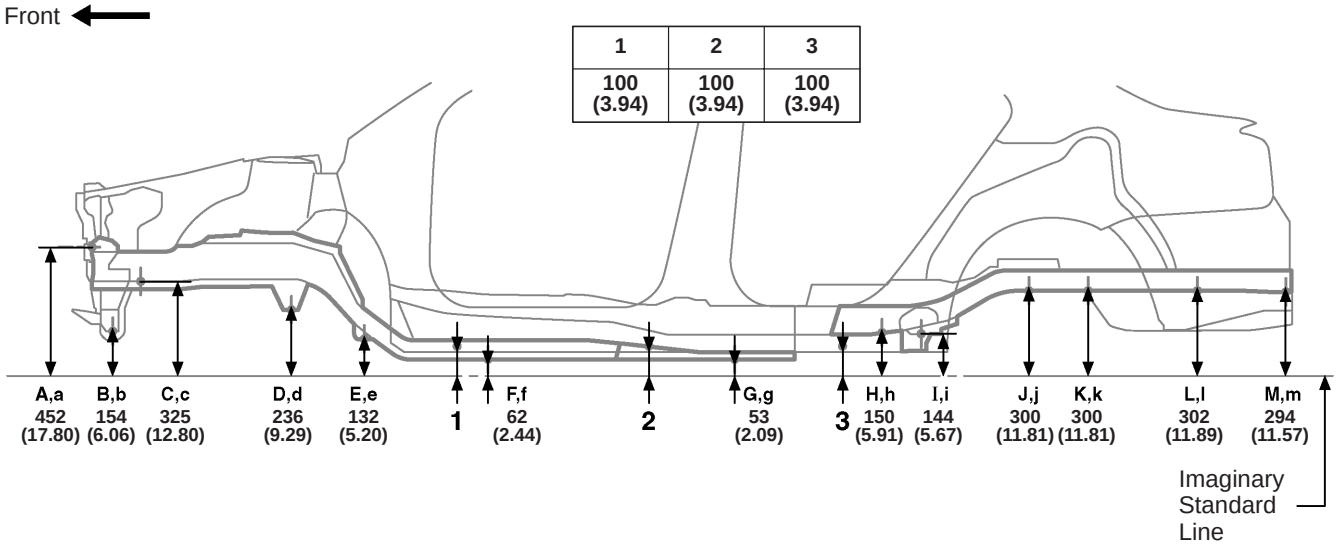

mm (in.)

Symbol	Name	Hole dia.	Symbol	Name	Hole dia.
A, a	Front bumper reinforcement installation nut	10 (0.39) nut	H, h	Rear floor side member standard hole	25 (0.98)
B, b	Center member installation nut	10 (0.39) nut	I, i	Rear suspension arm installation nut	12 (0.47) nut
C, c	Front side member standard hole	18 (0.71)	J, j	Rear floor No.2 crossmember standard hole	10 (0.39)
D, d	Front suspension member installation nut	16 (0.63) nut	K, k	Rear suspension member installation nut	14 (0.55) nut
E, e	Front suspension member installation nut	14 (0.55) nut	L, l	Rear floor side member standard hole	18 (0.71)
F, f	Front side member standard hole	18 (0.71)	M, m	Transport hook installation nut	12 (0.47) nut
G, g	Front floor under reinforcement standard hole	10 (0.39)	—	—	—

UNDER BODY (Cont'd)

(Three-Dimensional Distance)

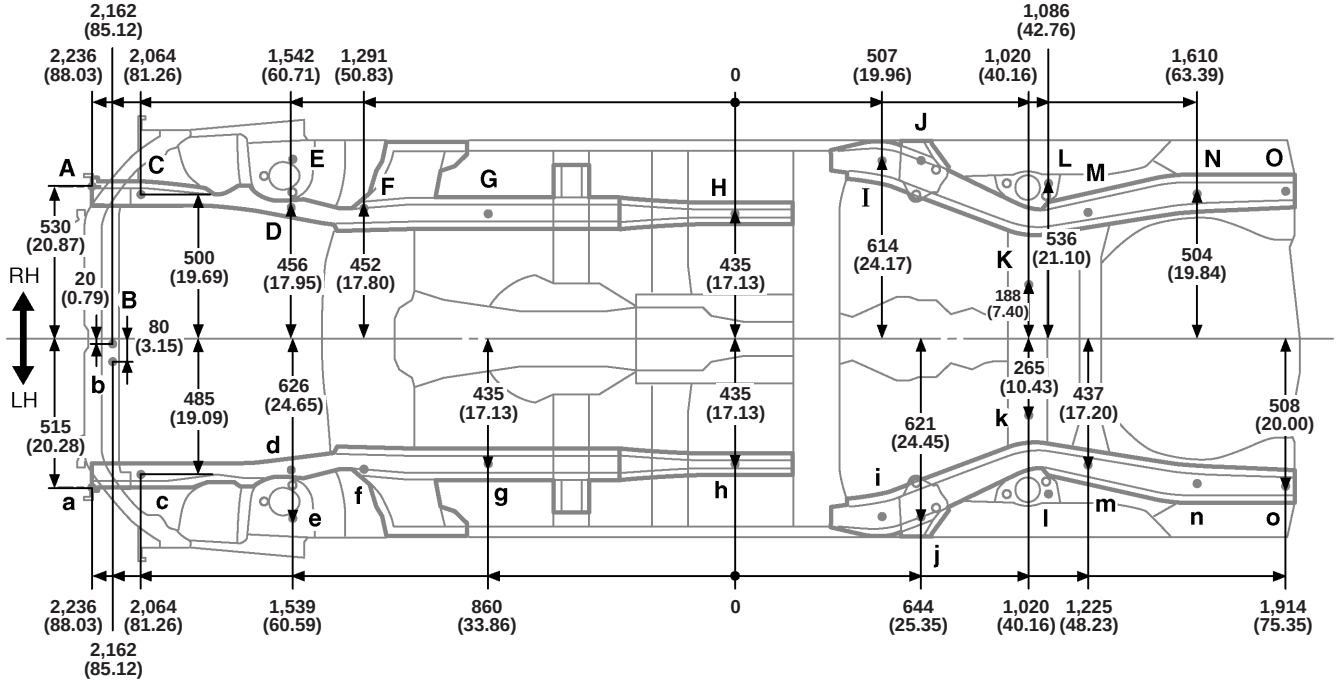

Wheel base	2,700 (106.30)

1	2	3
100 (3.94)	100 (3.94)	100 (3.94)

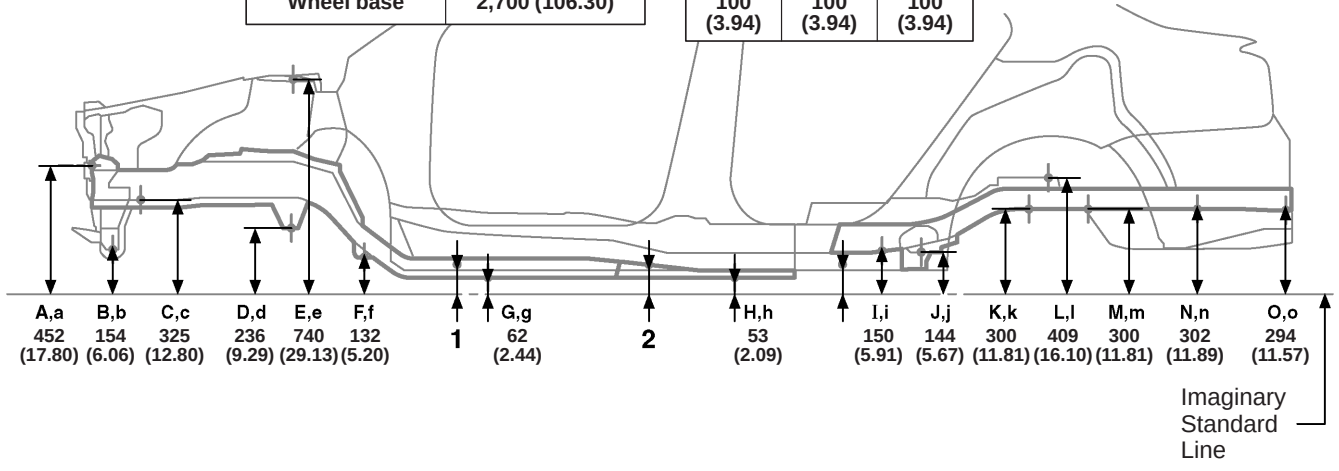

mm (in.)

Symbol	Name	Hole dia.	Symbol	Name	Hole dia.
A, a	Front bumper reinforcement installation nut	10 (0.39) nut	I, i	Reaer floor side member standard hole	25 (0.98)
B, b	Center member installation nut	10 (0.39) nut	J, j	Rear suspension arm installation nut	12 (0.47) nut
C, c	Front side member standard hole	18 (0.71)	K, k	Rear floor No.2 crossmember standard hole	10 (0.39)
D, d	Front suspension member installation nut	16 (0.63) nut	L, l	Rear spring support hole-rear outer	15 (0.59)
E, e	Front spring support hole-outer	11 (0.43)	M, m	Rear suspension member installation nut	14 (0.55) nut
F, f	Front suspension member installation nut	14 (0.55) nut	N, n	Rear floor side member standard hole	18 (0.71)
G, g	Front side member standard hole	18 (0.71)	O, o	Transport hook installation nut	12 (0.47) nut
H, h	Front floor under reinforcement standard hole	10 (0.39)	—	—	—

GENERAL REPAIR INSTRUCTIONS

1. WORK PRECAUTIONS

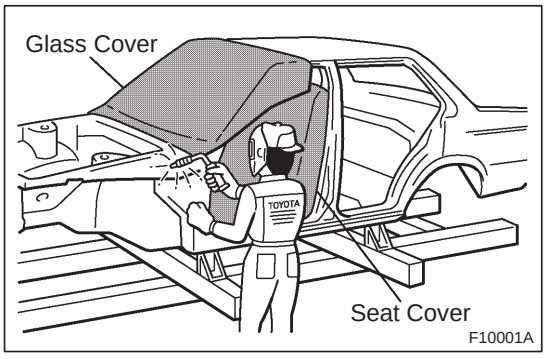

(a) VEHICLE PROTECTION

(1) When welding, protect the painted surfaces, windows, seats and carpet with heat resistant, fire-proof covers.

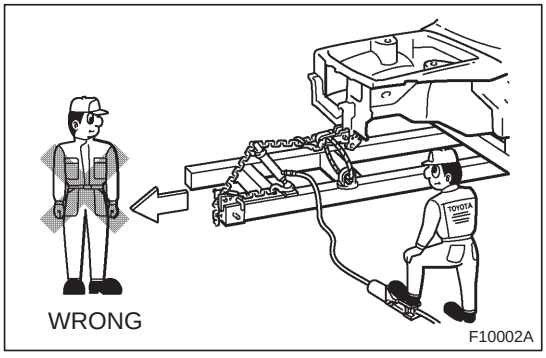

(b) SAFETY

(1) Never stand in direct line with the chain when using a puller on the body or frame, and be sure to attach a safety cable.

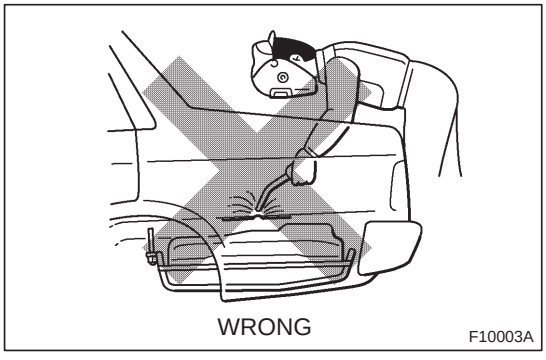

(2) Before performing repair work, check for fuel leaks. If a leak is found, be sure to close the opening totally.

(3) If it is necessary to use a flame in the area of the fuel tank, first remove the tank and plug the fuel line.

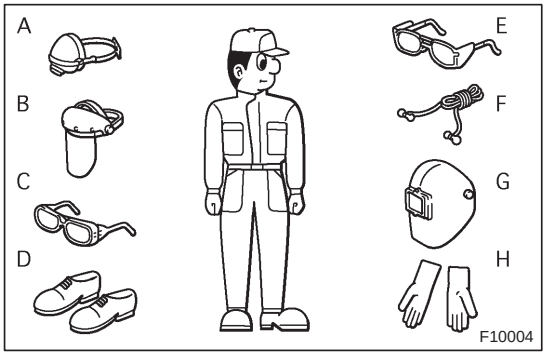

(c) SAFETY WORK CLOTHES

(1) In addition to the usual mechanic's wear, cap and safety shoes, the appropriate gloves, head protector, glasses, ear plugs, face protector, dust-prevention mask, etc. should be worn as the situation demands.

Code	Name
A	Dust-Prevention Mask
B	Face Protector
C	Eye Protector
D	Safety Shoes
E	Welder's Glasses
F	Ear Plugs
G	Head Protector
H	Welder's Gloves

2. HANDLING PRECAUTIONS OF PLASTIC BODY PARTS

(1) The repair procedure for plastic body parts must conform with the type of plastic material.

(2) Plastic body parts are identified by the codes in the following table.

(3) When repairing metal body parts adjoining plastic body parts (by brazing, frame cutting, welding, painting etc.), consideration must be given to the property of the plastic.

Code	Material name	Heat* resistant temperature limit °C (°F)	Resistance to alcohol or gasoline	Notes
AAS	Acrylonitrile Acrylic Styrene	80 (176)	Alcohol is harmless if applied only for short time in small amounts (e.g., quick wiping to remove grease).	Avoid gasoline and organic or aromatic solvents.
ABS	Acrylonitrile Butadiene Styrene	80 (176)	Alcohol is harmless if applied only for short time in small amounts (e.g., quick wiping to remove grease).	Avoid gasoline and organic or aromatic solvents.
AES	Acrylonitrile Ethylene Styrene	80 (176)	Alcohol is harmless if applied only for short time in small amounts (e.g., quick wiping to remove grease).	Avoid gasoline and organic or aromatic solvents.
ASA	Acrylonitrile Styrene Acrylate	80 (176)	Alcohol is harmless if applied only for short time in small amounts (e.g., quick wiping to remove grease).	Avoid gasoline and organic or aromatic solvents.
CAB	Cellulose Acetate	80 (176)	Alcohol is harmless if applied only for short time in small amounts (e.g., quick wiping to remove grease).	Avoid gasoline and organic or aromatic solvents.
EPDM	Ethylene Propylene	100 (212)	Alcohol is harmless. Gasoline is harmless if applied only for short time in small amounts.	Most solvents are harmless but avoid dipping in gasoline, solvents, etc.
FRP	Fiber Reinforced Plastics	180 (356)	Alcohol and gasoline are harmless.	Avoid alkali.
EVA	Ethylene Acetate	70 (158)	Alcohol is harmless if applid only for short time in small amounts (e.g., quick wiping to remove grease).	Avoid gasoline and organic or aromatic solvents.
PA	Polyamide (Nylon)	80 (176)	Alcohol and gasoline are harmless.	Avoid battery acid.
PBT	Polybutylene Terephthalate	160 (320)	Alcohol and gasoline are harmless.	Most solvents are harmless.
PC	Polycarbonate	120 (248)	Alcohol is harmless.	Avoid gasoline brake fluid, wax, wax removers and organic solvents. Avoid alkali.

*Temperatures higher than those listed here may result in material deformation during repair.

Code	Material name	Heat* resistant temperature limit °C (°F)	Resistance to alcohol or gasoline	Notes
PE	Polyethylene	80 (176)	Alcohol and gasoline are harmless.	Most solvents are harmless.
PET	Polyethylene Terephthalate	75 (167)	Alcohol and gasoline are harmless.	Avoid dipping in water.
PMMA	Polymethyl Methacrylate	80 (176)	Alcohol is harmless if applied only for short time in small amounts.	Avoid dipping or immersing in alcohol, gasoline, solvents, etc.
POM	Polyoxymethylene (Polyacetal)	100 (212)	Alcohol and gasoline are harmless.	Most solvents are harmless.
PP	Polypropylene	80 (176)	Alcohol and gasoline are harmless.	Most solvents are harmless.
PPO	Modified Polyphenylene Oxide	100 (212)	Alcohol is harmless.	Gasoline is harmless if applied only for quick wiping to remove grease.
PS	Polystyrene	60 (140)	Alcohol and gasoline are harmless if applied only for short time in small amounts.	Avoid dipping or immersing in alcohol, gasoline, solvents, etc.
PUR	Polyurethane	80 (176)	Alcohol is harmless if applied only for very short time in small amounts (e.g., quick wiping to remove grease).	Avoid dipping or immersing in alcohol, gasoline, solvents, etc.
PVC	Polyvinylchloride (Vinyl)	80 (176)	Alcohol and gasoline are harmless if applied only for short time in small amounts (e.g., quick wiping to remove grease).	Avoid dipping or immersing in alcohol, gasoline, solvents, etc.
SAN	Styrene Acrylonitrile	80 (176)	Alcohol is harmless if applied only for short time in small amounts (e.g., quick wiping to remove grease).	Avoid dipping or immersing in alcohol, gasoline, solvents etc.
TPO	Thermoplastic Olefine	80 (176)	Alcohol is harmless. Gasoline is harmless if applied only for short time in small amounts.	Most solvents are harmless but avoid dipping in gasoline, solvents, etc.
TPU	Thermoplastic Polyurethane	80 (176)	Alcohol is harmless if applied only for short time in small amounts (e.g., quick wiping to remove grease).	Avoid dipping or immersing in alcohol, gasoline, solvents, etc.
TSOP	TOYOTA Super Olefine Polymer	80 (176)	Alcohol and gasoline are harmless.	Most solvents are harmless.
UP	Unsaturated Polyester	110 (233)	Alcohol and gasoline are harmless.	Avoid alkali.

*Temperatures higher than those listed here may result in material deformation during repair.

3. LOCATION OF PLASTIC BODY PARTS

Parts Name	Code
Radiator Grille	ABS/ASA
Front Bumper Cover	TSOP
Front Spoiler	TSOP
Front Bumper Side Moulding	TSOP
Headlight Washer Nozzle Cover	PC/ABS
Headlight	PC/PP
Fog light	PP
Side Turn Signal Light	PMMA/ABS
Outer Rear View Mirror	ASA
Roof Rack Leg Cover (Wagon Only)	ABS
Door Outside Handle	PC/PBT/PA
Door Outside Moulding	PP/EPDM
Body Rocker Panel Moulding	PP
Rear Combination Light	PMMA/PC/ABS
Rear Spoiler (Wagon Only)	ABS
Center Stop Light (Wagon Only)	PMMA/ABS
Luggage Compartment Door Outside Garnish	ABS
License Plate Light	PMMA/ABS
Rear Bumper Cover	TSOP
Rear Bumper Side Moulding	TSOP

- Resin material differs with model.

/ Made up of 2 or more kinds of materials.

HOW TO USE THIS MANUAL

1. BODY PANEL REPLACEMENT THIS MANUAL

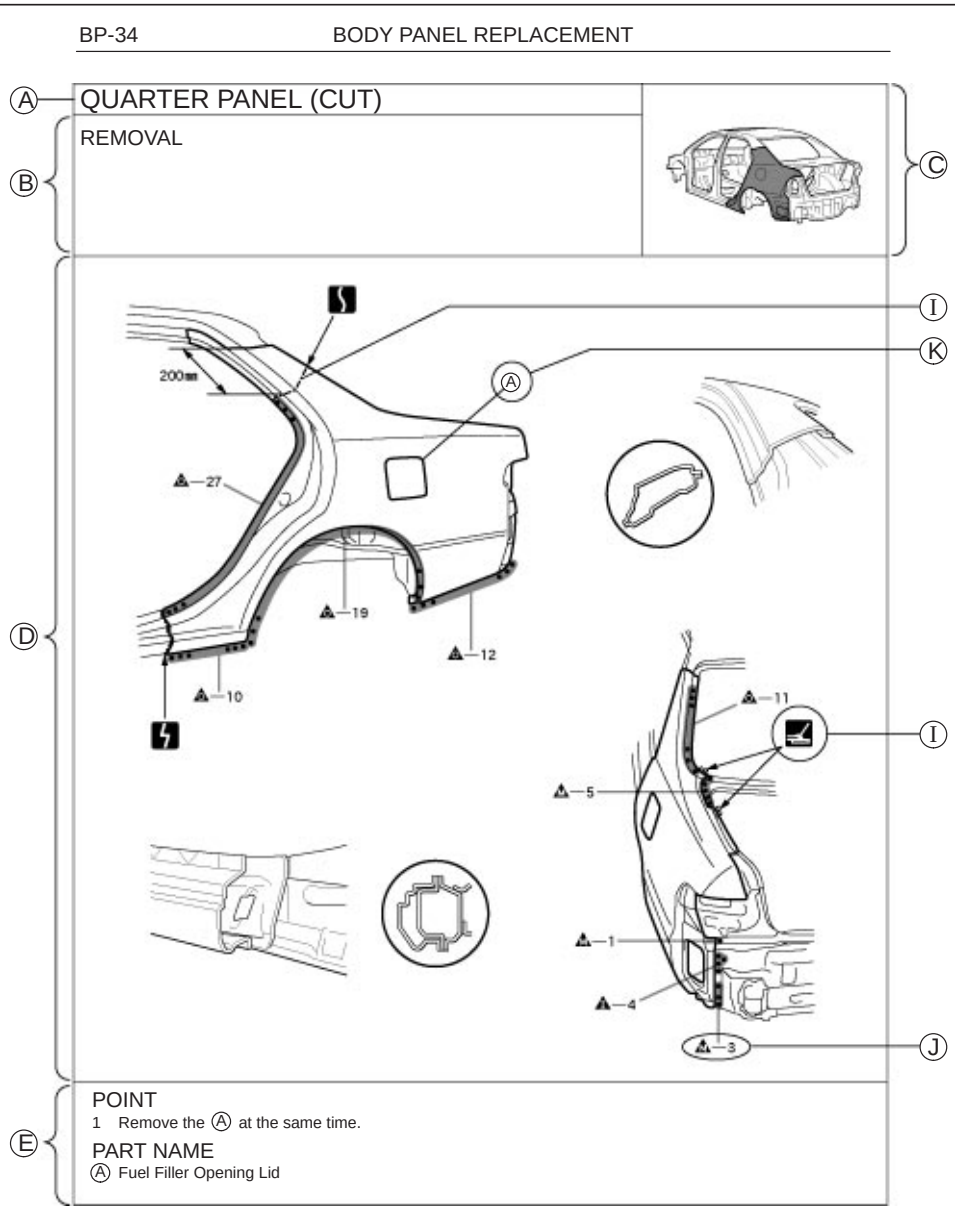

Ⓐ : REPLACEMENT PART AND METHOD

QUARTER PANEL (CUT)

- Replacement method
  - (ASSY) ... Assembly replacement
  - (CUT) ... Major cutting (less than 1/2 of part used)
  - (CUT-H) ... Half cutting (about 1/2 of part used)
  - (CUT-P) ... Partial cutting (most of part used)
- Replacement part

Ⓑ : REMOVAL CONDTIONS

Ⓒ : PART LOCATION

Ⓓ : REMOVAL DIAGRAM
Describes in detail removal of the damaged part involving repair by cutting.

Ⓔ : REMOVAL GUIDE
Provides additional information to more efficiently help you perform the removal.

F13890A

INSTALLATION
- Temporarily install the new parts and measure each part of the new parts in accordance with the body dimension diagram. (See the body dimension diagram)
- Inspect the fiting of the related parts around the new parts before welding. This affects the appearance of the finish.
- After welding, apply the polyurethane foam to the corresponding parts.
- After welding, apply body sealer and under-coating to the corresponding parts.
- After applying the top coat layer, apply anti-rust agent to the inside of the necked section structural weld spots.

(F)

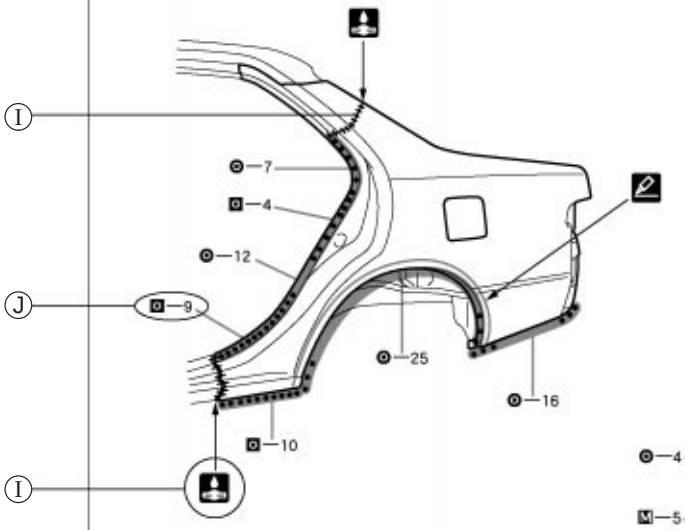

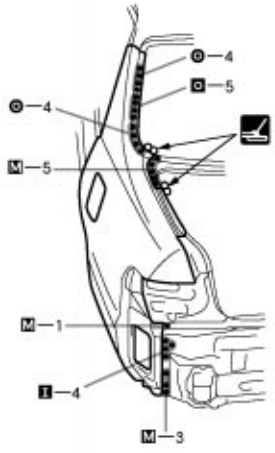

(G)

POINT

1 Before temporarily installing the new parts, apply body sealer to the wheel arch.
HINT:
1) Apply body sealer about 5mm (0.20in.) front the flange, avoiding any oozing.
2) Apply sealer evenly, about 3 – 4mm (0.12 – 0.16in.) in diameter.
3) For other sealing points, refer to section PC.

PART NAME

Ⓐ Fuel Filler Opening Lid Ⓑ Waterproof Rivet

(H)

(F) : INSTALLATION CONDITIONS

(G) : INSTALLATION DIAGRAM
Describes in detail installation to the new part involving repair by welding and/or cutting, but excluding painting.

(H) : INSTALLATIOLN GUIDE
Provides additional information to more efficiently help you perform the installation.

(I) : SYMBOLS
(See page IN-7)

(J) : ILLUSTRATION OF WELD POINTS
Weld method and panel position symbols (See page IN-9)

(K) : PART NAME

F13891A

2. SYMBOLS

The following symbols are used in the welding diagrams in section BP of this manual to indicate cutting areas and the types of weld required.

SYMBOLS	MEANING	ILLUSTRATION
	CUT AND JOIN LOCATION (SAW CUT)	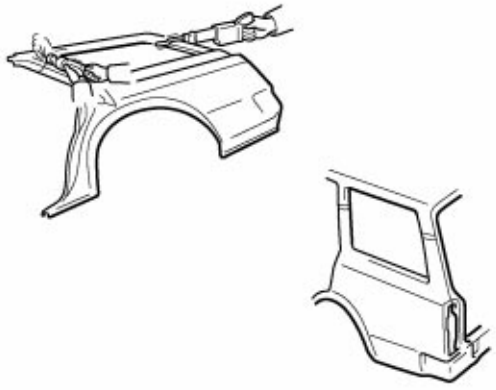
	CUT AND JOIN LOCATION (Cut Location for Supply Parts)	
	CUT LOCATION	
	CUT WITH DISC SANDER, ETC.	
	BRAZE (Removal)	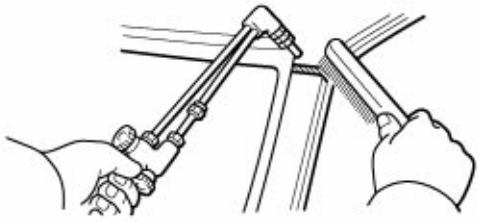
	BRAZE (Installation)	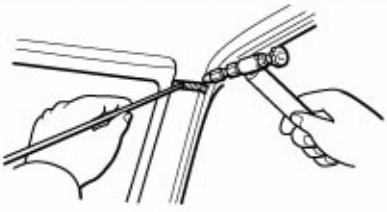
	— WELD POINTS	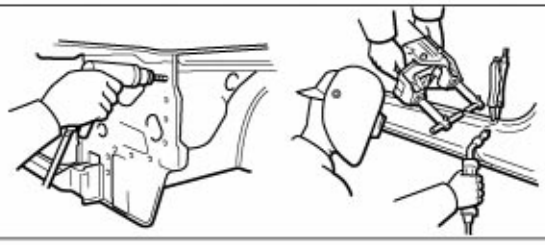
	— SPOT WELD OR MIG PLUG WELD (See Page IN-9)	
	CONTINUOUS MIG WELD (BUTT WELD)	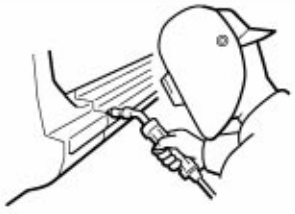
	CONTINUOUS MIG WELD (TACK WELD)	
	BODY SEALER	

F13893A

SYMBOLS		MEANING	ILLUSTRATION
—		Assembly Mark	
	—	BODY SEALER (Flat Finishing)	
	—	BODY SEALER (No flat Finishing)	

F13894A

3. ILLUSTRATION OF WELD POINT SYMBOLS

EXAMPLE:

REMOVAL

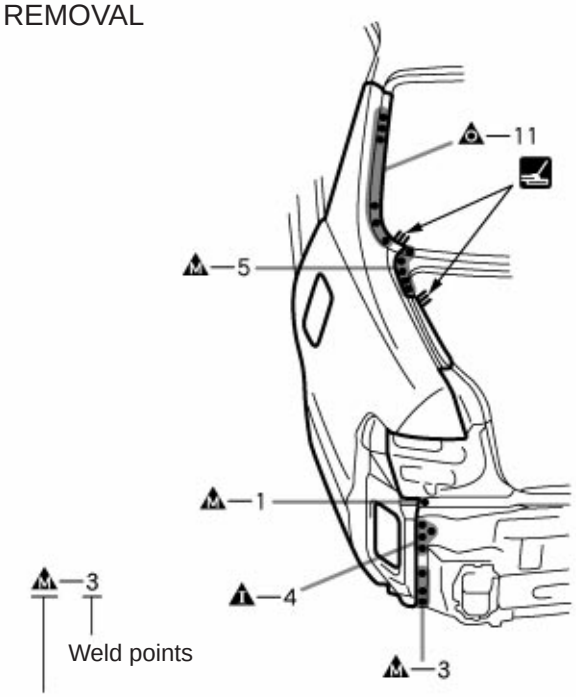

Remove weld point and panel position

INSTALLATION

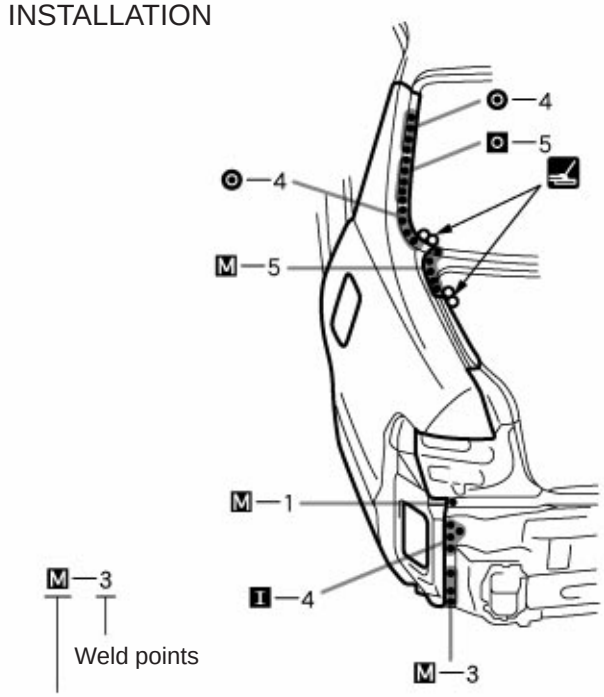

Weld method and panel position

SYMBOLS	MEANING	ILLUSTRATION
◎ M I	Remove Weld Points	
◎	(Outside)	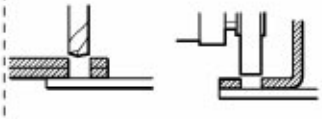
M	(Middle)	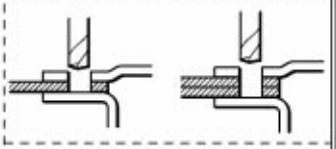
I	(Inside)	

HINT: Panel position symbols are as seen from the working posture.

SYMBOLS	MEANING	ILLUSTRATION
◎ M I	Spot Weld	
◎ M I	MIG Plug Weld	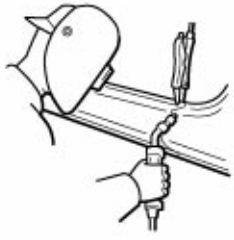
+	Spot MIG Weld	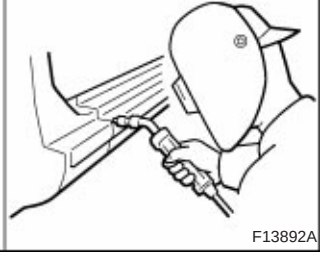

F13892A

PROPER AND EFFICIENT WORK PROCEDURES

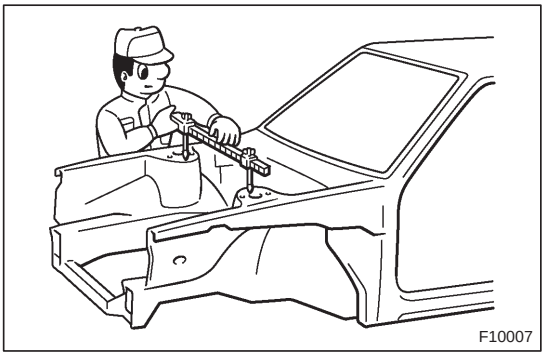
F10007

1. REMOVAL

(a) PRE-REMOVAL MEASURING

(1) Before removal or cutting operations, take measurements in accordance with the dimension diagram. Always use a puller to straighten a damaged body or frame.

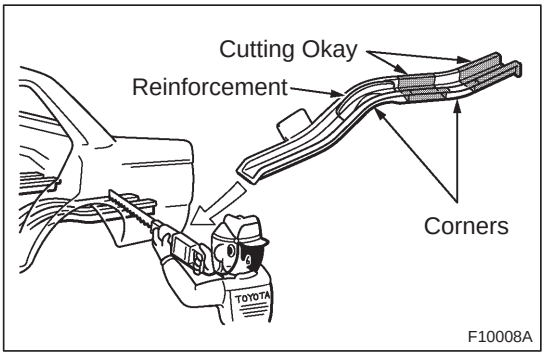

F10008A

(b) CUTTING AREA

(1) Always cut in a straight line and avoid reinforced area.

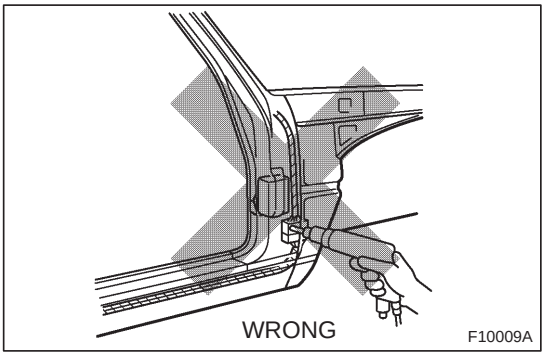

F10009A

(c) PRECAUTIONS FOR DRILLING OR CUTTING

(1) Check behind any area to be drilled or cut to insure that there are no hoses, wires, etc., that may be damaged.

HINT: See "Handling Precautions on Related Components" on page IN-15.

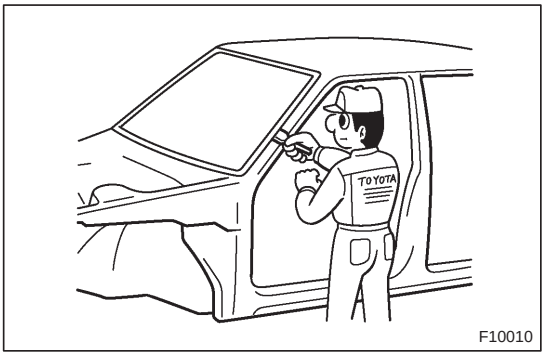

F10010

(d) REMOVAL OF ADJACENT COMPONENTS

(1) When removing adjacent components, apply protective tape to the surrounding body and your tools to prevent damage.

HINT: See "Handling Precautions on Related Components" on page IN-15.

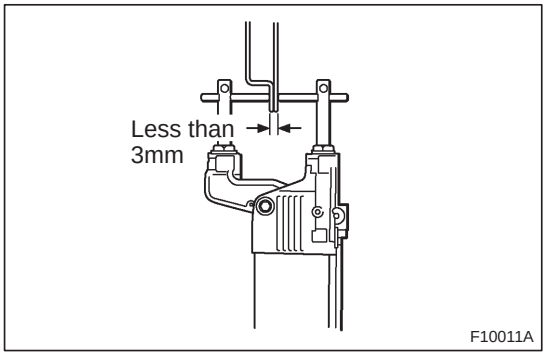

2. PREPARATION FOR INSTALLATION

(a) SPOT WELD POINTS

(1) When welding panels with a combined thickness of over 3mm (0.12in.), use a MIG (Metal Inert Gas) welder for plug welding.

HINT: Spot welding will not provide sufficient durability for panels over 3mm (0.12in.) thick.

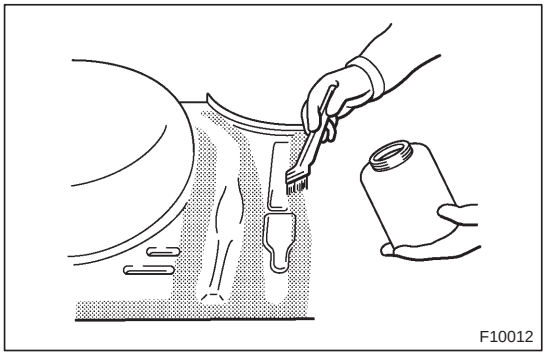

(b) APPLICATION OF WELD-THROUGH PRIMER (SPOT SEALER)

(1) Remove the paint from the portion of the new parts and body to be welded, and apply weld-through primer.

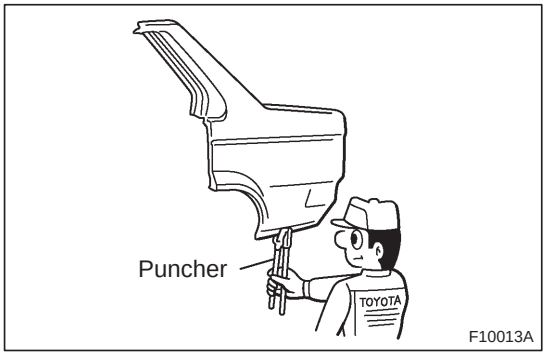

(c) MAKING HOLES FOR PLUG WELDING

(1) For areas where a spot welder cannot be used, use a puncher or drill to make holes for plug welding.

REFERENCE: mm (in.)

Thickness of welded portion	Size of plug hole
1.0 (0.04) under	5 (0.20) ø over
1.0 (0.04) – 1.5 (0.06)	6.4 (0.26) ø over
1.5 (0.06) over	8 (0.31) ø over

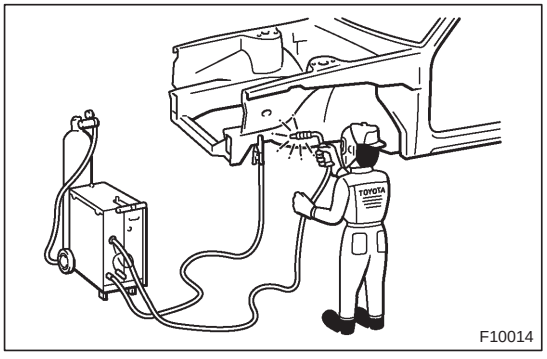

(d) SAFETY PRECAUTIONS FOR ELECTRICAL COMPONENTS

(1) When welding, there is a danger that electrical components will be damaged by the electrical current flowing through the body.

(2) Before starting work, disconnect the negative terminal of the battery and ground the welder near the welding location of the body.

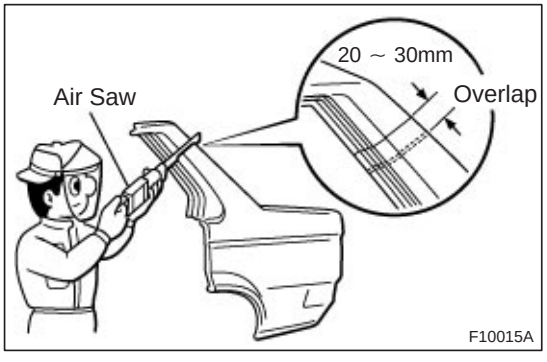

(e) ROUGH CUTTING OF JOINTS

(1) For joint areas, rough cut the new parts, leaving 20 – 30mm (0.79 – 1.18in.) overlap.

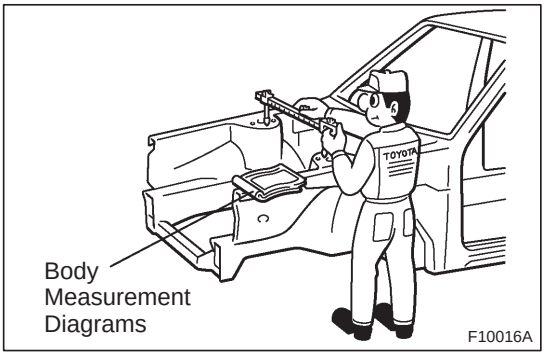

3. INSTALLATION

(a) PRE-WELDING MEASUREMENTS

(1) Always take measurements before installing underbody or engine components to insure correct assembly. After installation, confirm proper fit.

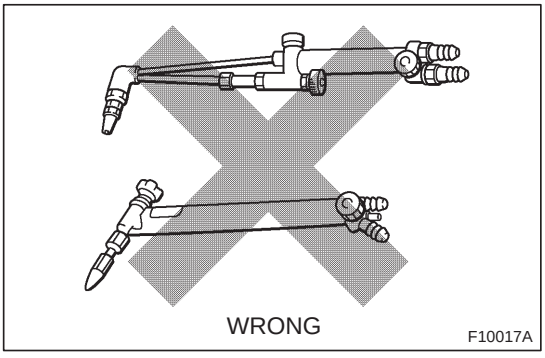

(b) WELDING PRECAUTIONS

(1) The number of welding spots should be as follows.

Spot weld: 1.3 X No. of manufacturer's spots.
Plug weld: More than No. of manufacturer's plugs.

(2) Plug welding should be done with a MIG (Metal Inert Gas) welder. Do not gas weld or braze panels at areas other than specified.

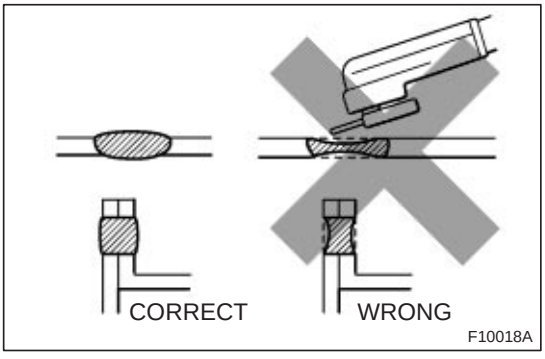

(c) POST-WELDING REFINISHING

(1) Always check the welded spots to insure they are secure.

(2) When smoothing out the weld spots with a disc grinder, be careful not to grind off too much as this would weaken the weld.

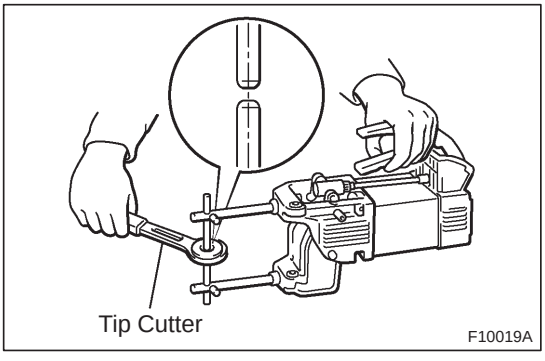

(d) SPOT WELD LOCATIONS

(1) Try to avoid welding over previous spots.

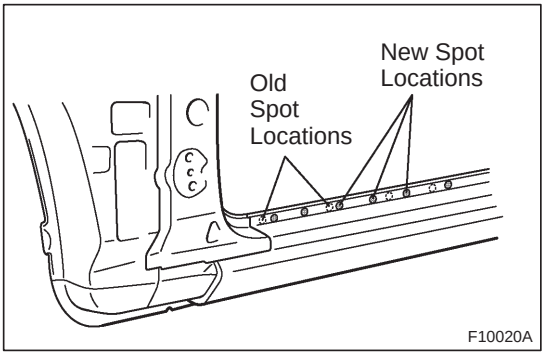

(e) SPOT WELDING PRECAUTIONS

(1) The shape of the welding tip point has an effect on the strength of the weld.

(2) Always insure that the seams and welding tip are free of paint.

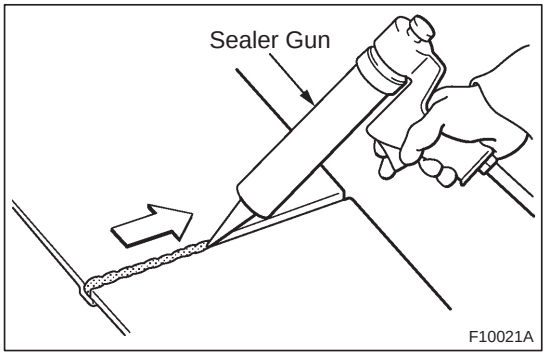

4. ANTI-RUST TREATMENT

(a) BODY SEALER APPLICATION

(1) For water-proofing and anti-corrosion measures, always apply the body sealer to the body panel seams and hems of the doors, hoods, etc.

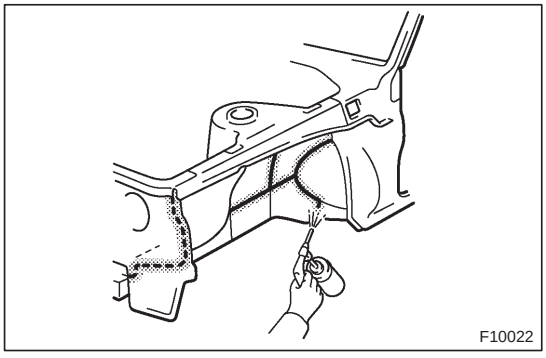

(b) UNDERCOAT APPLICATION

(1) To prevent corrosion and protect the body from damage by flying stones, always apply sufficient undercoat to the bottom surface of the under body and inside of the wheel housings.

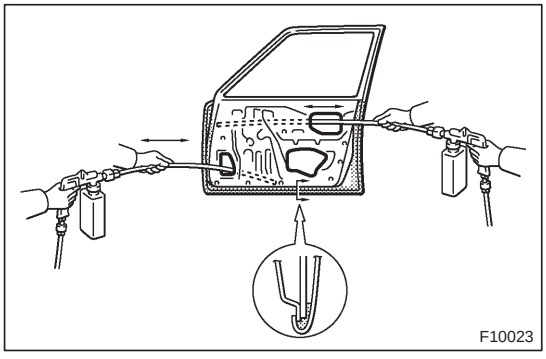

5. ANTI-RUST TREATMENT AFTER PAINTING PROCESS

(a) ANTI-RUST AGENT (WAX) APPLICATION

(1) To preserve impossible to paint areas from corrosion, always apply sufficient anti-rust agent (wax) to the inside of the hemming areas of the doors and hoods, and around the hinges, or the welded surfaces inside the boxed cross-section structure of the side member, body pillar, etc.

6. ANTI-RUST TREATMENT BY PAINTING

REFERENCE:

Painting prevents corrosion and protect the sheet metal from damage. In this section, anti-chipping paint only for anti-corrosion purpose is described.

(a) ANTI-CHIPPING PAINT

(1) To prevent corrosion and protect the body from damage by flying stones, etc., apply anti-chipping paint to the rocker panel, wheel arch areas, balance panel, etc.

HINT:
Depending on the model or the application area, there are cases where the application of anti-chipping paint is necessary before the second coat or after the top coat.

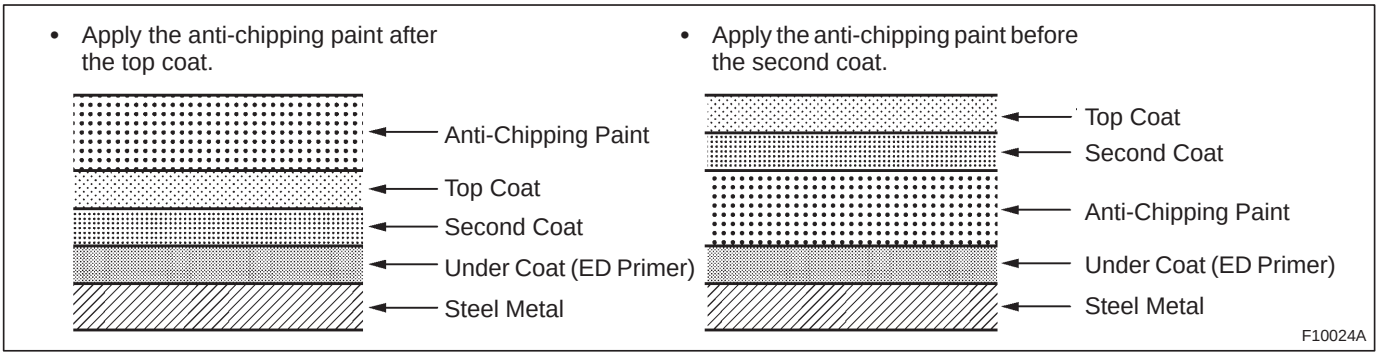

HANDLING PRECAUTIONS ON RELATED COMPONENTS

1. BRAKE SYSTEM

The brake system is one of the most important safety components. Always follow the directions and notes given in section BR of the repair manual for the relevant model when handling brake system parts.

NOTICE: When repairing the brake master cylinder or TRAC system, bleed the air out of the TRAC system.

2. DRIVE TRAIN AND CHASSIS

The drive train and chassis are components that can have great effects on the running performance and vibration resistance of the vehicle. After installing components in the sections listed in the table below, perform alignments to ensure correct mounting angles and dimensions. Particularly accurate repair of the body must also be done to ensure correct alignment.

HINT: Correct procedures and special tools are required for alignment. Always follow the directions given in the repair manual for the relevant model during alignment and section DI of this section.

Component to be aligned	Section of repair manual for relevant model
Front Wheels	Front Suspension (26) section
Rear Wheels	Rear Suspension (27) section

3. COMPONENTS ADJACENT TO THE BODY PANELS

Various types of component parts are mounted directly on or adjacently to the body panels. Strictly observe the following precautions to prevent damaging these components and the body panels during handling.

- Before repairing the body panels, remove their components or apply protective covers over the components.
- Before prying components off using a screwdriver or a scraper, etc., attach protective tape to the tool tip or blade to prevent damaging the components and the body paint.
- Before removing components from the outer surface of the body, attach protective tape to the body to ensure no damage to painted areas.

  HINT: Apply touch-up paint to any damaged paint surfaces.
- Before drilling or cutting sections, make sure that there are no wires, etc. on the reverse side.

4. ECU (ELECTRONIC CONTROL UNIT)

Many ECUs are mounted in this vehicle.
Take the following precautions during body repair to prevent damage to the ECUs.

- Before starting electric welding operations, disconnect the negative (–) terminal cable from the battery.
  When the negative (–) terminal cable is disconnected from the battery, memory of the clock and audio systems will be cancelled. So before starting work, make a record of the contents memorized by each memory system. Then when work is finished, reset the clock and audio systems as before.
  When the vehicle has tilt and telescopic steering, power seat and outside rear view mirror, which are all equipped with memory function, it is not possible to make a record of the memory contents. So when the operation is finished, it will be necessary to explain this fact to the customer, and request the customer to adjust the features and reset the memory.
- Do not expose the ECUs to ambient temperatures above 80°C (176°F).

  NOTICE: If it is possible the ambient temperature may reach 80° C (176° F) or more, remove the ECUs from the vehicle before starting work.
- Be careful not to drop the ECUs and not to apply physical shocks to them.

PRECAUTIONS FOR REPAIRING BODY STRUCTURE PANELS

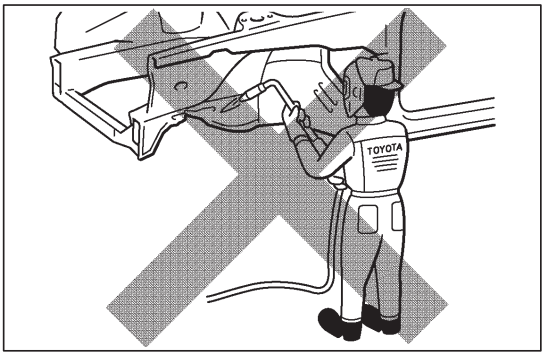

1. HEAT REPAIR FOR BODY STRUCTURE PANELS

Toyota prohibits the use of the heat repair method on body structure panels when repairing a vehicle damaged in a collision.
Panels that have high strength and rigidity, as well as a long life span for the automobile body are being sought after.
At Toyota, in order to fulfill these requirement, we use high tensile strength steel sheets and rust preventive steel sheets on the body.
High tensile steel sheets are made with alloy additives and a special heat treatment in order to improve the strength.
To prevent the occurrence of rust for a long period of time, the surface of the steel is coated with a zinc alloy.
If a body structure parts are heat repaired with an acetylene torch or other heating source, the crystalline organization of the steel sheet will change and the strength of the steel sheet will be reduced.
The ability of the body to resist rust is significantly lowered as well since the rust resistant zinc coating is destroyed by heat and the steel sheet surface is oxidized.

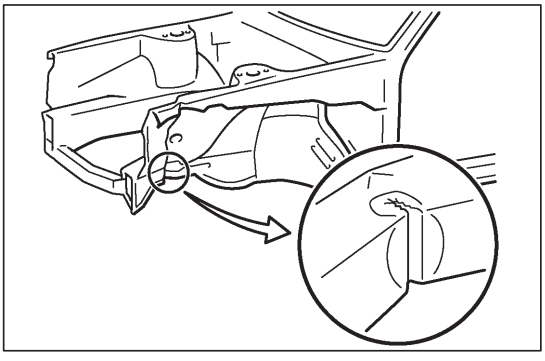

2. STRUCTURE PANEL KINKS

A sharp deformation angle on the panel that cannot be returned to its original shape by pulling or hammering is called a kink.
Since structure parts were designed to exhibit a 100% performance when they were in their original shape, if they are deformed in an accident, or if the deformed parts are repaired and reused, they become unable to exhibit the same performance as intended in the design.
It is necessary to replace the part where the kink has occurred.

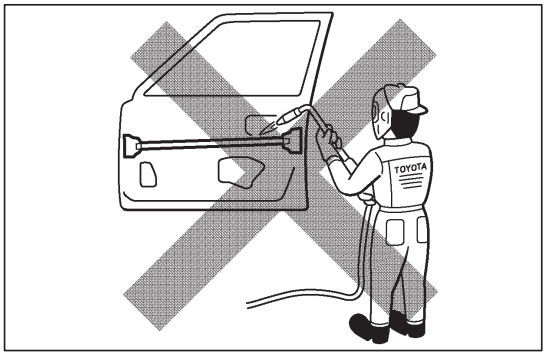

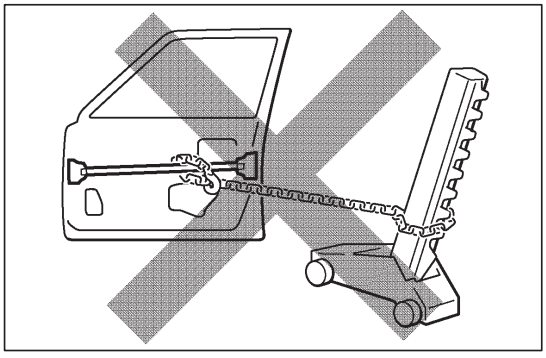

3. IMPACT BEAM REPAIR

The impact beam and bracket are necessary and important parts in maintaining a survival space for passengers in a side collision.

For impact beam, we use special high tensile strength steel.

The high tensile strength steel maintains its special crystalline organization by heat treatment or alloy additives.

Since these parts were designed to exhibit a 100% performance when they were in their original shape, if they are deformed in an accident, or if the deformed parts are repaired and reused, they become unable to exhibit the same performance as intended in the design.

It is necessary to replace the door assembly when impact beam or bracket is damaged.

ABBREVIATIONS USED IN THIS MANUAL

For convenience, the following abbreviations are used in this manual.

ABS	Antilock Brake System
A/C	Air Conditioner
assy	assembly
ECT	Electronic Controlled Transmission
ECU	Electronic Control Unit
e.g.	Exempli Gratia (for Example)
Ex.	Except
FWD	Front Wheel Drive Vehicles
4WD	Four Wheel Drive Vehicles
in.	inch
LH	Left-hand
LHD	Left-hand Drive
MIG	Metal Inert Gas
M/Y	Model Year
PPS	Progressive Power Steering
RH	Right-hand
RHD	Right-hand Drive
SRS	Supplemental Restraint System
SSM	Special Service Materials
w/	with
w/o	without

BODY PANEL UNDERCOATING AREAS

HINT:
1) First wipe off any dirt, grease or oil with a rag soaked in a grease, wax and silicone remover.
2) Cover the surrounding areas with masking paper to avoid coating unnecessary areas. If other areas are accidently coated, wipe off the coating immediately.
3) Apply the first coating of undercoat to all welded areas and panel joints, then apply a second coat over the entire area.
4) Do not coat parts which become hot, such as the tailpipe, or moving parts, such as the propeller shaft.
5) Besides the locations described below, apply undercoating to all weld points under the body to insure corrosion prevention.
6) Be sure to seal the edge of the flange of the member and bracket with undercoating.
7) If undercoat is damaged by peeling, cracks, etc., be sure to repair as necessary.
8) Before the undercoat apply sealer allowing rust prevention to be attained.

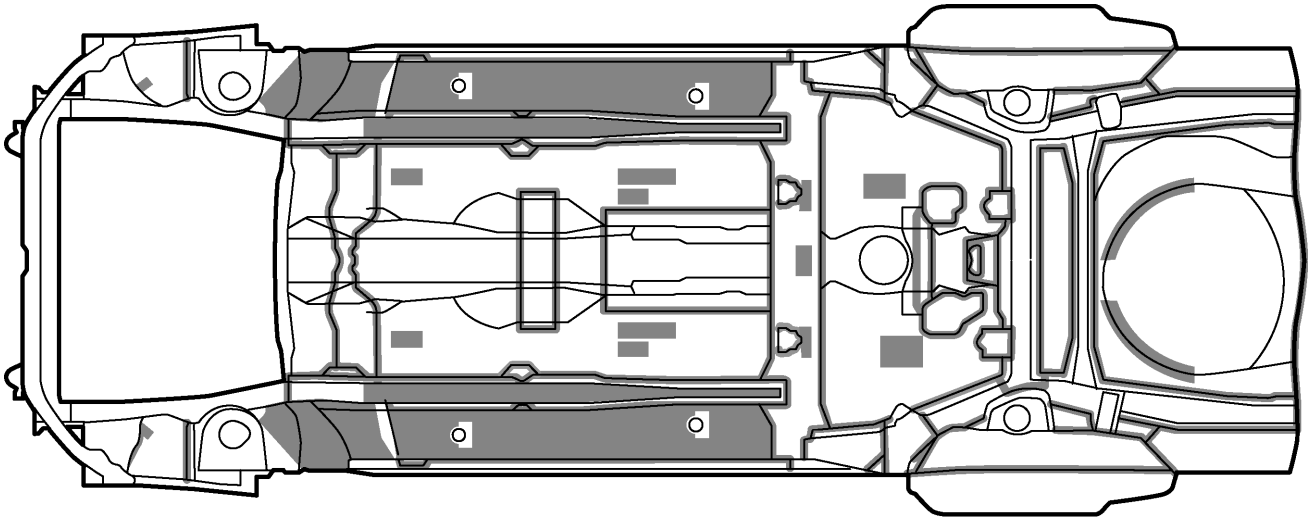

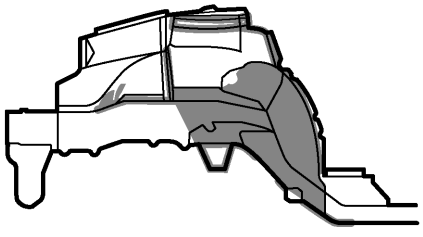

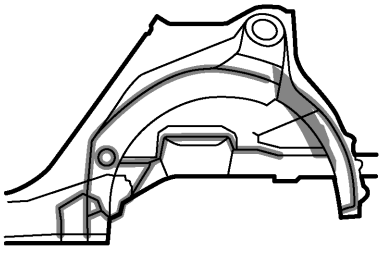

F14411

REFERENCE
Referring to the notes above, undercoating should be applied according to the specifications for your country.

FOAMED MATERIAL APPLICATION AREAS

The sections shown in the figure below are filled with foamed material to provide noise insullation.
After repairing these sections or their peripheries, refill with foamed materials
HINT:
1) Use the service holes located on the reverse side of the body panel to refill with foamed materials.
2) When handling foamed material, follow the directions of the material's manufacturer.

[Sedan]

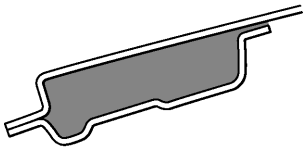

A – A

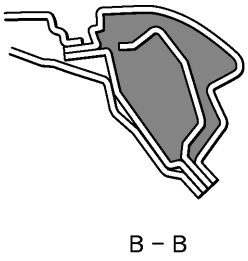

B – B

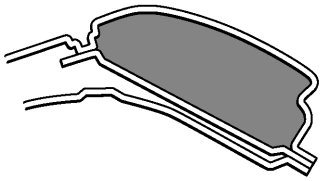

C – C



D – D

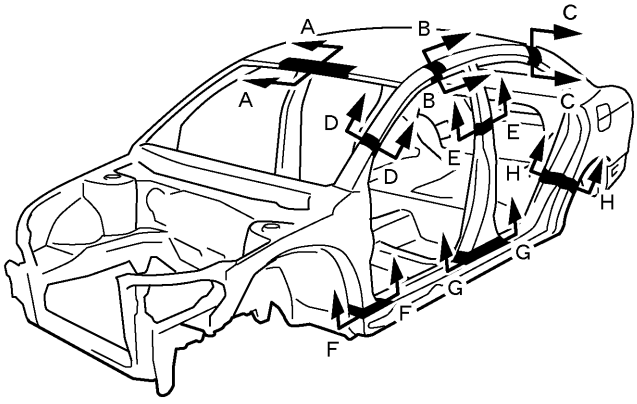

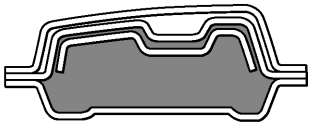

E – E

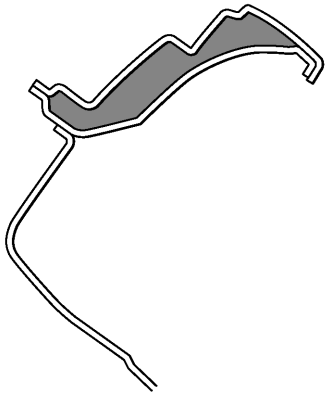

H – H

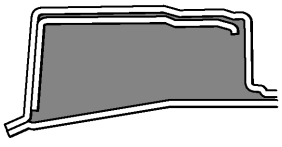

F – F

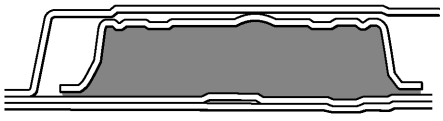

G – G

F14415

[Liftback]

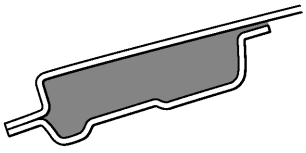

A – A

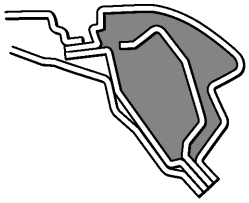

B – B

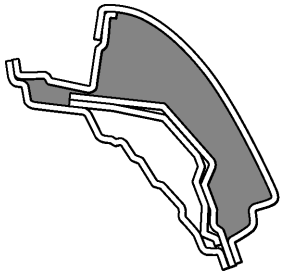

C – C

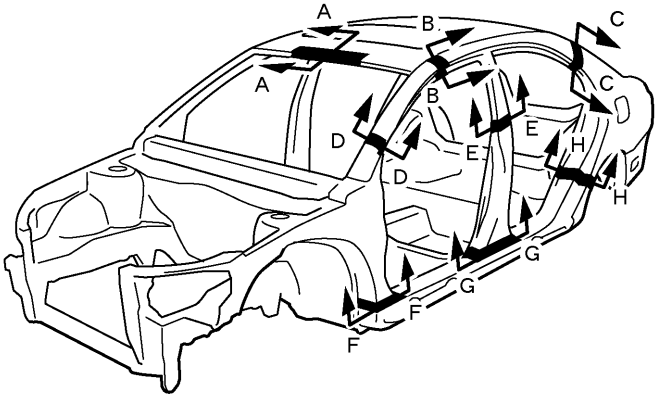

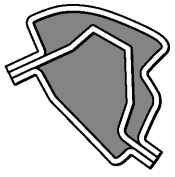

D – D



E – E

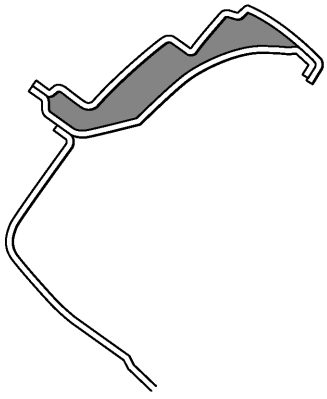

H – H

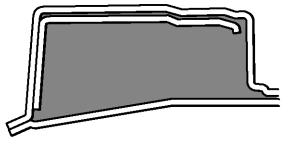

F – F



G – G

F14417

[Wagon]

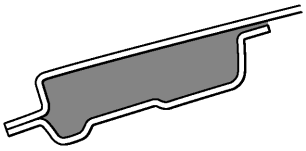

A – A

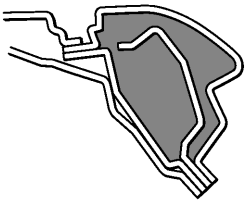

B – B

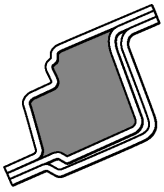

C – C

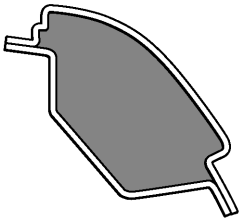

D – D

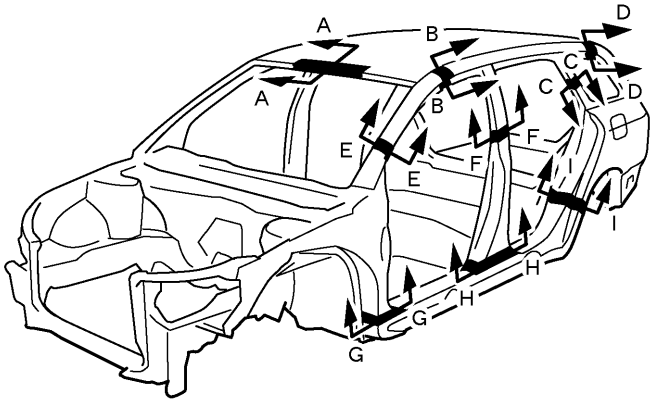

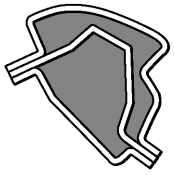

E – E

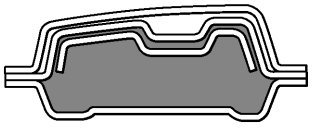

F – F

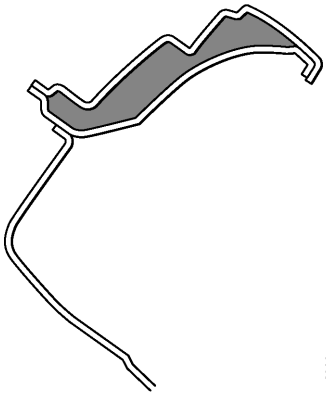

I – I

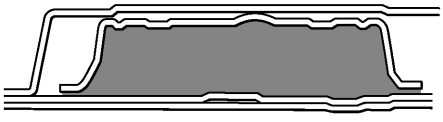

H – H

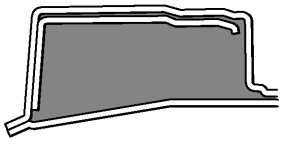

G – G

F14416

BODY PANEL ANTI-RUST AGENT (WAX) APPLICATION AREAS

HINT:
1) Whenever adjusting the doors and hoods, apply anti-rust agent (wax) around the hinges.
2) Even if partially repairing a part, apply anti-rust agent (wax) over the entire application area of the part.
3) Wipe off the anti-rust agent immediately with a rag soaked in a grease, wax and silicone remover, if accidently applied to other areas.

[Sedan]

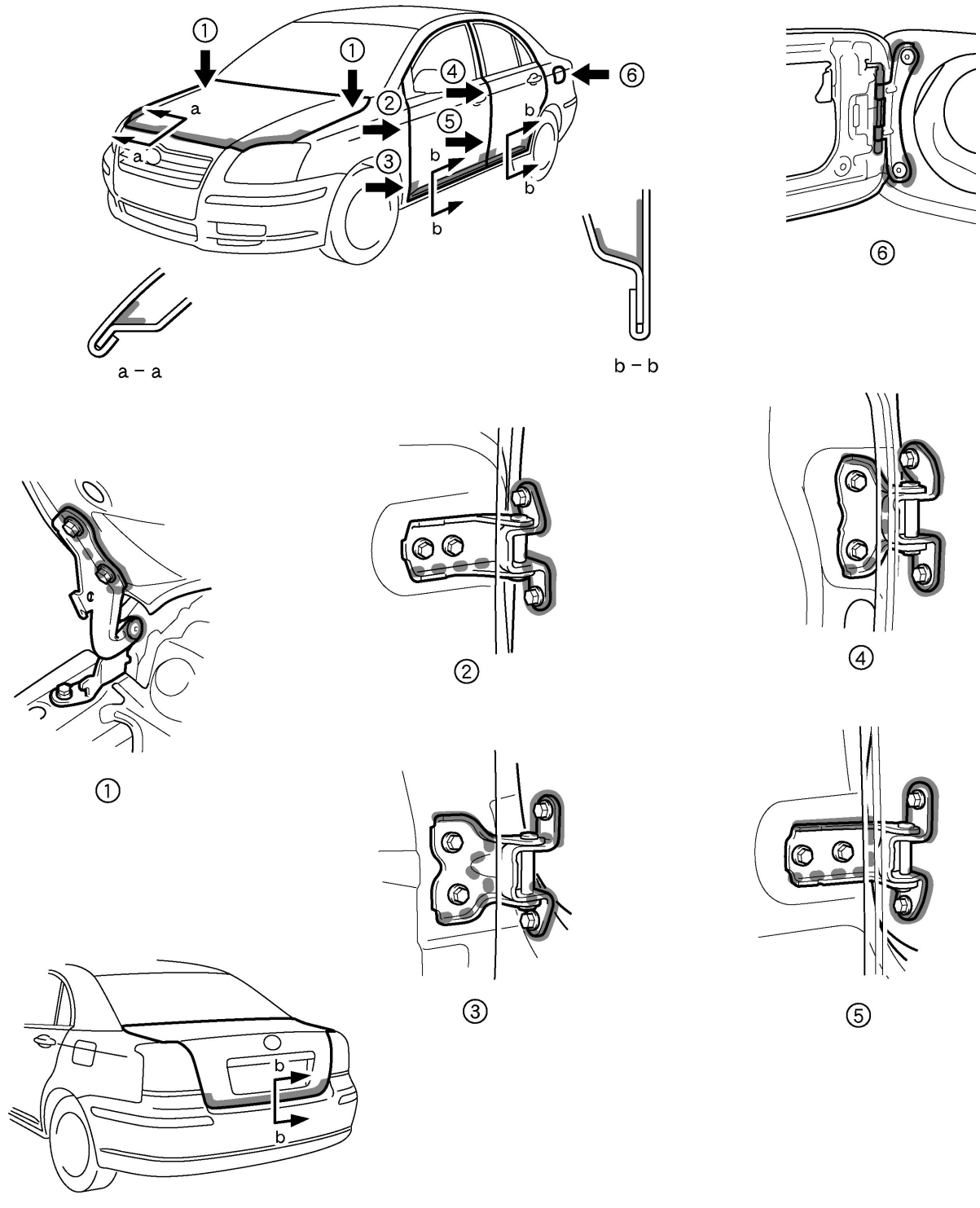

F14412

[Liftback]

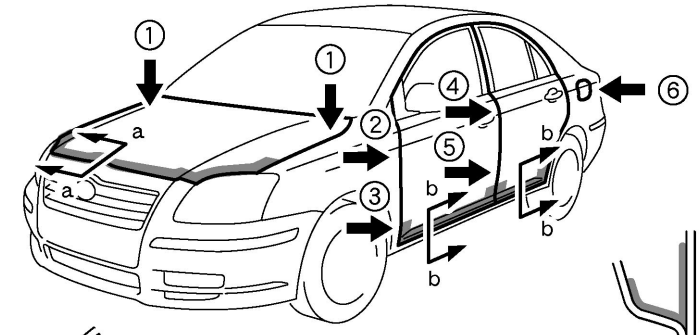



a – a

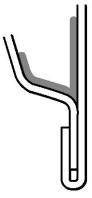

b – b

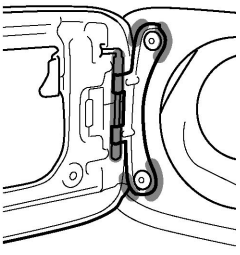

⑥

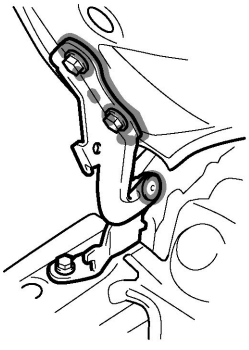

①

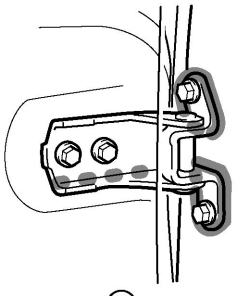

②

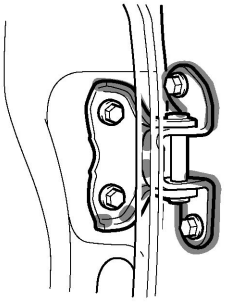

④

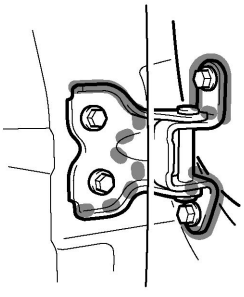

③

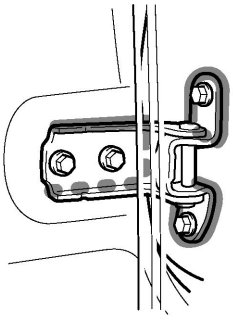

⑤

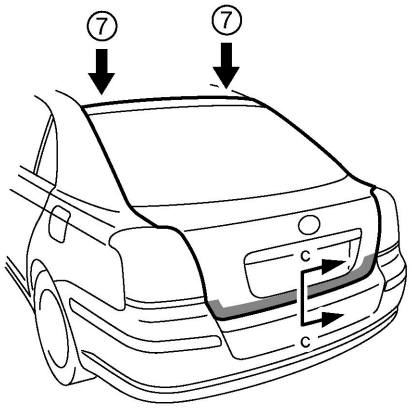

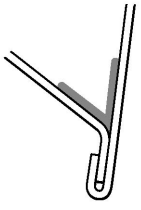

c – c

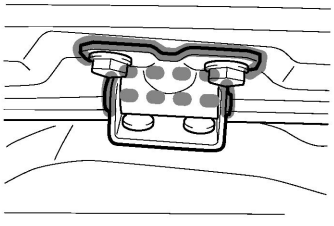

⑦

F14414

[Wagon]

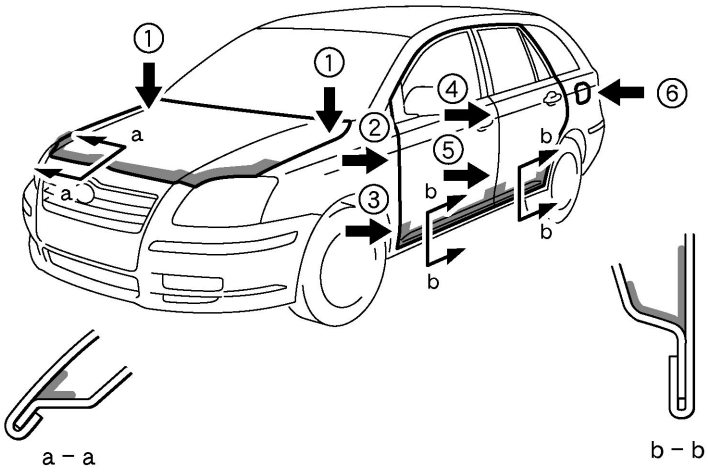

a – a

b – b

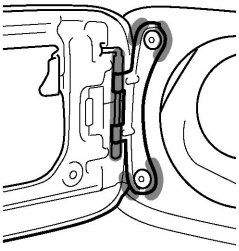

⑥

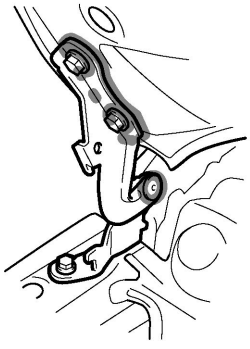

①

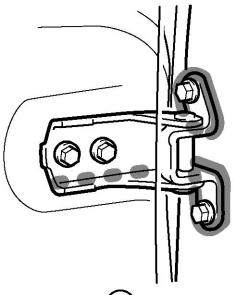

②

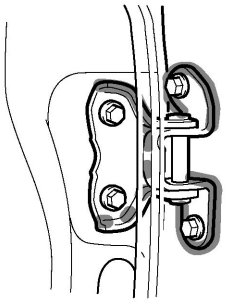

④

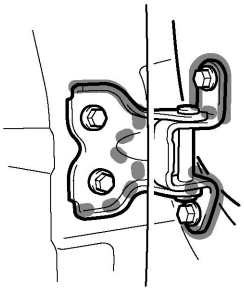

③

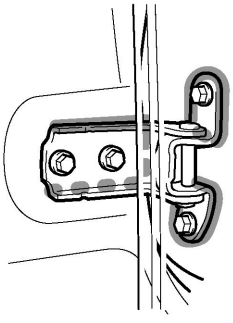

⑤

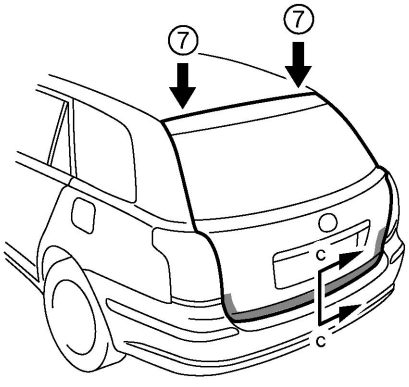

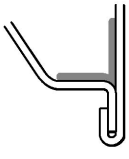

c – c

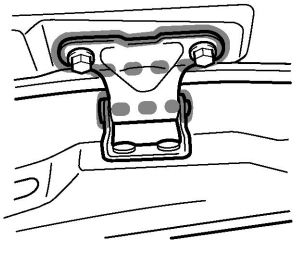

⑦

F14413

SILENCER SHEET INSTALLATION AREAS

Thickness of Asphalt Sheet

· · · · · 1.6mm (0.063in.)

· · · · · 1.8mm (0.071in.)

· · · · · 3.0mm (0.118in.)

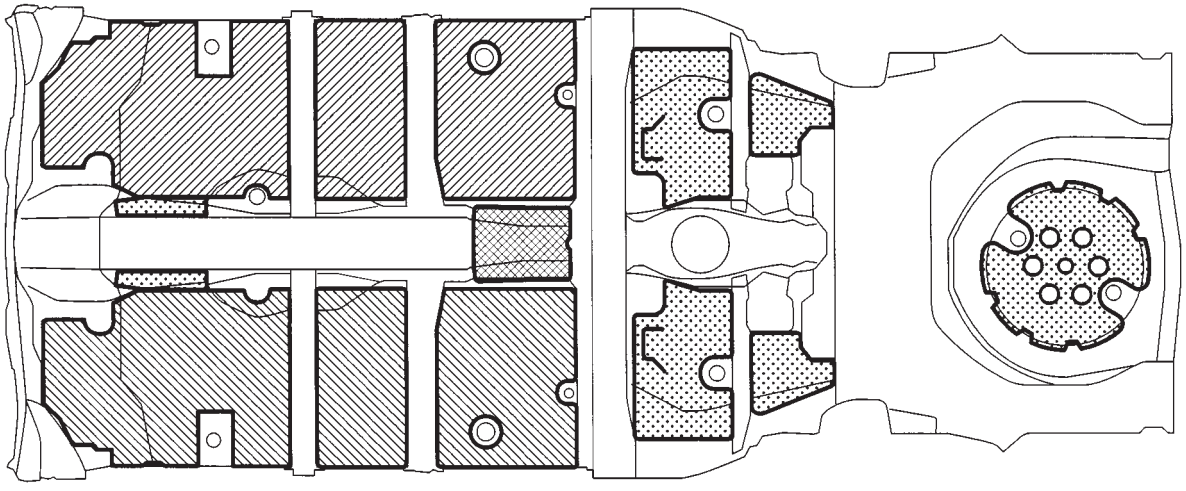

F14418

BODY PANEL ANTI-CHIPPING PAINT APPLICATION AREAS

HINT:
1) Anti-chipping paint should be applide to some areas before the second coat and to others after the top coat.
2) If other areas are accidentally coated, wipe of the paint immediately with a rag soaked in grease, wax and silicone remover.

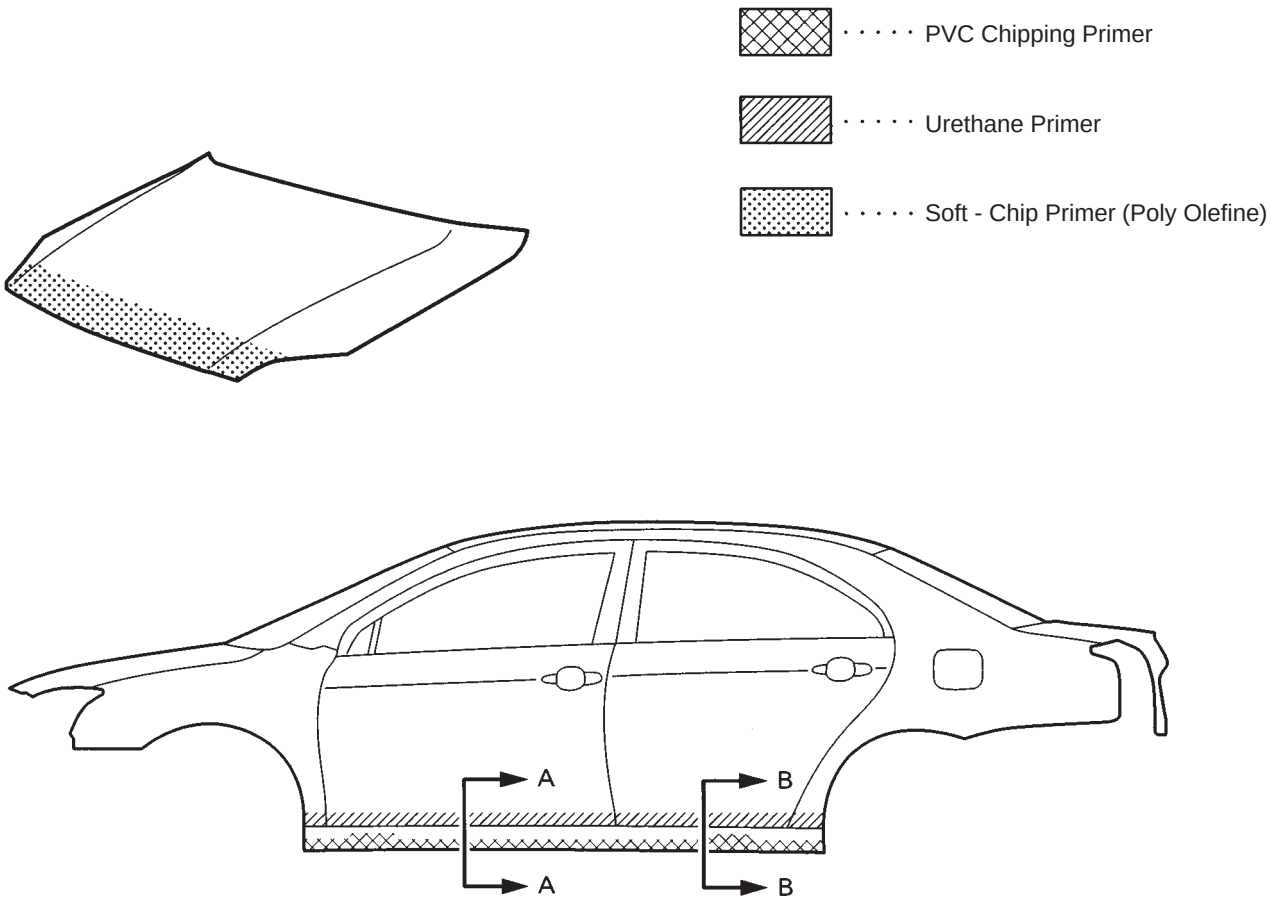

F14419